GMRIT

Curriculum
2023

B. Tech.
Electronics and Communication Engineering
(Duration of Study : 4 years)

GMRIT
Training Tomorrow's Engineers Today

Department of Electronics and Communication Engineering
GMR Institute of Technology
Rajam, Andhra Pradesh
(An Autonomous Institute Affiliated to JNTU-GV, Vizinagram, AP)
NBA Accredited and NAAC Accredited

GMR Institute of Technology-Rajam

Department of Electronics and Communication Engineering

VISION

To be a preferred department of learning for students and teachers alike, with a commitment towards academics & research, serving the students in an atmosphere of innovation, critical thinking and making them industry ready.

MISSION

- To provide adaptable education in a collaborative and innovative environment in skilling the graduates to solve real world problems in the field of Electronics and communication Engineering
- To prepare the students as critical thinking professionals with multidisciplinary research orientation and Innovation
- To instill ethical values and nurture the graduates who will be able to contribute to the society

Program Educational objectives

- PEO1: Employ logical and analytical skills in solving complex real-world engineering problems in the areas of Electronics and communication Engineering and allied fields
- PEO2: Adaptable to emerging technologies with enhanced professional skills and ability towards continuous learning, facilitating higher studies and research
- PEO3: Demonstrate professional ethics, leadership qualities and promote inclusive and collaborative growth with human values towards societal interest.

Program Outcomes

Engineering graduate will be able to

PO 1: Apply the knowledge of mathematics, science, engineering fundamentals, and an engineering specialization to the solution of complex engineering problems.(Engineering knowledge)

PO 2: Identify, formulate, review research literature, and analyze complex engineering problems reaching substantiated conclusions using first principles of mathematics, natural sciences, and engineering sciences.(Problem analysis)

PO 3: Design solutions for complex engineering problems and design system components or processes that meet the specified needs with appropriate consideration for the public health and safety, and the cultural, societal, and environmental considerations. (Design/development of solutions)

PO 4: Use research-based knowledge and research methods including design of experiments, analysis and interpretation of data, and synthesis of the information to provide valid conclusions.(Conduct investigations of complex problems)

PO 5: Create, select, and apply appropriate techniques, resources, and modern engineering and IT tools including prediction and modeling to complex engineering activities with an understanding of the limitations.(Modern tool usage)

PO 6: Apply reasoning informed by the contextual knowledge to assess societal, health, safety, legal and cultural issues and the consequent responsibilities relevant to the professional engineering practice.(The engineer and society)

PO 7: Understand the impact of the professional engineering solutions in societal and environmental contexts, and demonstrate the knowledge of, and need for sustainable development.(Environment and sustainability)

PO 8: Apply ethical principles and commit to professional ethics and responsibilities and norms of the engineering practice.(Ethics)

PO 9: Function effectively as an individual, and as a member or leader in diverse teams, and in multidisciplinary settings.(Individual and team work)

PO 10: Communicate effectively on complex engineering activities with the engineering community and with society at large, such as, being able to comprehend and write effective reports and design documentation, make effective presentations, and give and receive clear instructions.(Communication)

PO 11: Demonstrate knowledge and understanding of the engineering and management principles and apply these to one's own work, as a member and leader in a team, to manage projects and in multidisciplinary environments.(Project management and finance)

PO 12: Recognize the need for, and have the preparation and ability to engage in independent and life-long learning in the broadest context of technological change.(Life-long learning)

PSO 1: Apply the knowledge of technological evolutions, model / characterize devices and design the integrated circuits to build analog and digital systems. (Program Specific)

PSO 2: Understand and apply the fundamentals of communication and signal processing to develop systems wrapped with industry standard protocols and standards. (Program Specific)

Department of Electronics and Communication Engineering

Minimum Credits to be earned: 160 (for Regular Students)

1st SEMESTER

Pattern-I - A to H Sections				Pattern-II - I to P Sections			
S. No.	**Course Code**	**Course Name**	**Credits**	**S. No.**	**Course Code**	**Course Name**	**Credits**
1	23PYX01	Engineering Physics	3	1	23CYX01 23CYX02	Chemistry (EEE, ECE, CSE, AIML, AIDS, IT) Engineering Chemistry (CE, ME)	3
2	23MAX01	Linear Algebra& Calculus	3	2	23MAX01	Linear Algebra& Calculus	3
3	23BEX01	Basic Electrical and Electronics Engineering	3	3	23BEX02	Basic Civil & Mechanical Engineering	3
4	23BEX03	Introduction to Programming	3	4	23BEX03	Introduction to Programming	3
5	23BEX04	Engineering Graphics	3	5	23HSX01	Communicative English	2
6	23PYX02	Engineering Physics Lab	1	6	23CYX03 23CYX04	Chemistry Lab (EEE, ECE, CSE, AIML, AIDS, IT) Engineering Chemistry Lab (CE, ME)	1
7	23BEX05	Electrical & Electronics Engineering Workshop	1.5	7	23BEX06	Engineering Workshop	1.5
8	23BEX07	Computer Programming Lab	1.5	8	23BEX07	Computer Programming Lab	1.5
9	23BEX08	IT Workshop	1	9	23HSX02	Communicative English Lab	1
				10	23HSX11	ECA (Yoga / Sports)	0.5
				11	23HSX12	CCA (NSS/NCC/Community Service)	0.5
		Total	**20**			**Total**	**20**

2nd SEMESTER

Pattern-I - A to H Sections				Pattern-II - I to P Sections			
S. No.	**Course Code**	**Course Name**	**Credits**	**S. No.**	**Course Code**	**Course Name**	**Cre dits**
1	23CYX01 23CYX02	Chemistry (EEE, ECE, CSE, AIML, AIDS, IT) Engineering Chemistry (CE, ME)	3	1	23PYX01	Engineering Physics	3
2	23MAX02	DIFFERENTIAL EQUATIONS AND VECTOR CALCULUS	3	2	23MAX02	DIFFERENTIAL EQUATIONS AND VECTOR CALCULUS	3
3	23BEX02	Basic Civil & Mechanical Engineering	3	3	23BEX01	Basic Electrical and Electronics Engineering	3
4	23ME201 23CS201 23EE201 23EC201 (Branch Specific Theory)	Engineering Mechanics (Civil, Mech) ; Data Structures (CSE, CSE-AI&DS, CSE-AI&ML, IT) ; Electrical Circuit Analysis-1 (EEE); Network Analysis (ECE);	3	4	23ME201 23CS201 23EE201 23EC201 (Branch Specific Theory)	Engineering Mechanics (Civil, Mech) ; Data Structures (CSE, CSE-AI&DS, CSE-AI&ML, IT) ; Electrical Circuit Analysis-1 (EEE); Network Analysis (ECE);	3
5	23HSX01	Communicative English	2	5	23BEX04	Engineering Graphics	3
6	23CYX03 23CYX04	Chemistry Lab (EEE, ECE, CSE, AIML, AIDS, IT) Engineering Chemistry Lab (CE, ME)	1	6	23PYX02	Engineering Physics Lab	1
7	23BEX06	Engineering Workshop	1.5	7	23BEX05	Electrical & Electronics Engineering Workshop	1.5
8	23CE201 23CS202 23EE202 23EC202 23ME202 (Branch Specific Lab)	Engineering Mechanics and Building Practices Lab (Civil); Data Structures Lab (CSE, CSE-AI&DS, CSE-AI&ML, IT); Electrical Circuits Lab (EEE); Network Analysis Lab (ECE); Engineering Mechanics Lab (Mech);	1.5	8	23CE201 23CS202 23EE202 23EC202 23ME202 (Branch Specific Lab)	Engineering Mechanics and Building Practices Lab (Civil); Data Structures Lab (CSE, CSE-AI&DS, CSE-AI&ML, IT); Electrical Circuits Lab(EEE); Network Analysis Lab(ECE); Engineering Mechanics Lab (Mech);	1.5
9	23HSX02	Communicative English Lab	1	9	23BEX08	IT Workshop	1
10	23HSX11	ECA (Yoga / Sports)	0.5				
11	23HSX12	CCA (NSS/NCC/Community Service)	0.5				
		Total	**20**			**Total**	**20**

No	Course Code	Course	POs	Contact Hours			
				L	T	P	C
Third Semester							
1	23MA301	Complex Variables	1, 2,3,4,PSO2	3	-	-	3
2	23EC301	Electronic Devices and Circuits	1,2,3,4,PSO1	3	-	-	3
3	23EC302	Python Programming	1,2, 4,5	3	-	2	4
4	23EC303	Logic Circuit Design	1,2, 3,4,PSO1	3	-	-	3
5	23EC304	Random Variables and Stochastic Processes	1,2,3,4, PSO2	3	-	-	3
6	23EC305	Signals & Systems	1,2,3,4,5, PSO2	3	-	2	4
7	23EC306	Electronic Devices and Circuits Lab	1, 2,3, 4, PSO1	-	-	3	1.5
8	23EC307	Logic Circuit Design Lab	1, 2, 3,4, 5, PSO1	-	-	3	1.5
9	23ESX01	Employability Skills I	1,2,3,5,8,10,12	-	-	2	--
		Audit course					--
			Total	**18**	**0**	**13**	**23**
Fourth Semester							
1	23CSE01	Object Oriented Programming	1,2, 3,4,5	3	-	-	3
2	23EC401	Analog and Digital Communications	1,2, 3,4,PSO2	3	-	-	3
3	23EC402	Analog Electronic Circuits	1, 2, 4,5, PSO1	3	-	2	4
4	23EC403	Electromagnetic Waves & Transmission Lines	1,2,3, 4,PSO2	3	-	-	3
5	23EC404	Linear Control Systems	1, 2, 3,PSO1, PSO2	3	-	-	3
6	23CSE02	Object Oriented Programming Lab	1,2,3,4,5	-	-	3	1.5
7	23EC405	Analog and Digital Communications Lab	1, 2, 3,4,5, PSO2	-	-	3	1.5
8	23ESX01	Employability Skills I	1,2,5,8,10,12	-	-	2	2
			Total	**15**	**0**	**10**	**21**
Fifth Semester							
1	23EC501	Linear and Digital IC Applications	1,2, 3,4,5,PSO1	3	-	-	3
2	23EC502	Microprocessors and Microcontrollers	1, 2, 3, 4, 5, PSO1	3	-	2	4
3	23EC503	VLSI Design	1, 2,3, 4, 5, PSO1	3	-	2	4
4	23EC504	Antennas and Microwave Engineering	1,2, 3,4,PSO2	3	-	-	3
5		Elective I (Professional Elective)		3	-	-	3
6		Elective II (Open Elective I)		3	-	-	3
7	23EC505	Linear IC Applications Lab	1,2,3, 4, PSO1	-	-	3	1.5
8	23TPX01	Term Paper	1,4,9,10,12,PSO1,PSO2	-	-	3	1.5
9	23ESX02	Employability Skills II	1,2,5,8,10,12	-	-	2	--
10	23SIX01	Summer Internship I	1,2,8,10,12	-	-	-	1
			Total	**18**	**0**	**13**	**24**
Sixth Semester							
1	23HSX10	Engineering Economics and Project Management	1,2,10,11,12	3	-	-	3
2	23EC601	Cellular and Mobile Communications	1,2, 3,4,PSO2	3	-	-	3
3	23EC602	Digital Signal Processing	1,2, 3,4,PSO2	3	-	-	3

4		Elective III (Professional Elective)		3	-	2	4
5		Elective IV (Open Elective II)		3	-	-	3
6	23EC603	Digital Signal Processing Lab	1,2,4,5, PSO2	-	-	3	1.5
7	23 MPX01	Mini Project	ALL	-	-	3	1.5
8	23ESX02	Employability Skills II	1,2,5,8,10,12	-	-	2	2
9	23ATX01	Environmental Studies	1,6,7,12	-	-	-	-
10	23ATX02	Human Values and Professional Ethics	----------	-	-	-	-
11	23ATX03	Indian Knowledge Systems	----------	-	-	-	-
			Total	**15**	**0**	**11**	**21**
Seventh Semester							
1	23PWX01	Project Work	ALL	-	-	16	8
2		Elective V (Professional Elective)		3	-	-	3
3		Elective VI (Professional Elective)		3	-	-	3
4		Elective VII (Open Elective III)		3	-	-	3
5	23SIX02	Summer Internship II	1,2,8,10,12	-	-	-	1
			Total	**9**	**0**	**16**	**18**
Eighth Semester							
1	23FIX01	Full Semester Internship (FSI)	1,2,5,8,9,10, PSO1, PSO2	-	-	-	8
2		Elective VIII (Professional Elective)		-	-	-	3
3		Elective IX (Open Elective IV)		-	-	-	2
			Total	**0**	**0**	**-**	**13**

List of Electives

Language Electives							
No.	**Course Code**	**Course**	**POs**	**Contact Hours**			
				L	**T**	**P**	**C**
1	23HSX03	Advanced Communicative English	1,9,10,11,12	2	-	-	2
2	23HSX04	Communicative German	6,9,10,11,12	2	-	-	2
3	23HSX05	Communicative French	6,9,10,11,12	2	-	-	2
4	23HSX06	Communicative Japanese		2	-	-	2
5	23HSX07	Communicative Spanish		2	-	-	2
6	23HSX08	Communicative Korean		2	-	-	2
7	23HSX09	Communicative Hindi	6,9,10,11,12	2	-	-	2
Elective I							
Career Path I, II, III and Other Core Electives							
1	23ECC11	RTL Coding Techniques (Chip Design Career Path)	1, 2, 3,4, PSO1	3	-	-	3
2	23ECC21	IoT Architecture and Protocols (Embedded System Design Career Path)	1, 2, 3,6,7,8,PSO1,PSO_2	3	-	-	3
3	23ECC31	Coding Theory and Techniques (Advanced Communications)	1, 2, 3,4,PSO2	3	-	-	3
4	23IT304	Database Management Systems	1, 2, 3,12,PSO_2	3	-	-	3
5	23CS201	Data Structures	1, 2, 3, 12, PSO_1	3	-	-	3
6	23CS403	Computer Organization and Architecture	1,2, PO_{12},PSO_1	3	-	-	3
		MOOCs		-	-	-	3
Elective III							
Career Path I, II, III and Other Core Electives							
1	23ECC12	System Verilog for Verification (Chip Design Career Path)	1, 2, 3,4,5, PSO1	3	-	2	4
2	23ECC22	Embedded System Design and Real Time Operating System (Embedded System Design Career Path)	1, 2, 3, 4, 5, PSO1	3	-	2	4
3	23ECC32	Principles of MIMO-OFDM Communications (Advanced Communications)	1, 2,4,5, PSO2	3	-	2	4
4	23EC004	Virtual Instrumentation	1, 2, 4, 5, PSO2	3	-	2	4
5	23EC005	Cryptography and Network Security	1, 3, 4, 5, PSO1	3	-	2	4
6	23CS503	Computer Networks	1,2,4,5,PSO1,PSO2	3	-	2	4
		MOOCs		-	-	-	3
Elective V							
Career Path I, II, III and Other Core Electives							
1	23ECC13	VLSI Physical Design with Timing Analysis (Chip Design Career Path)	1, 2, 3, PSO1	3	-	-	3
2	23ECC23	ARM Processor (Embedded System Design Career Path)	1,2, 3,PSO1	3	-	-	3
3	23ECC33	5G Communications (Advanced Communications)	1, 2, 3,7,PSO2	3	-	-	3
4	23EC006	Wireless Sensor Networks	1, 2, 3,4,PSO1, PSO2	3	-	-	3
5	23IT403	Operating Systems	1, 12	3	-	-	3
6	23CS603	Software Engineering	4, 5, 8, 11, PSO1	3	-	-	3
		MOOCs		-	-	-	3
Elective VI							

1	23EC007	Design for testability	1, 2, 3, PSO1	3	-	-	3
2	23EC008	Biomedical Signal Processing	1, 2, 3,PSO2	3	-	-	3
3	23EC009	Digital Image Processing	1, 2, 3,PSO2	3	-	-	3
4	23EC010	Neural Networks and Deep Learning	1, 2, PSO1, PSO2	3	-	-	3
		MOOCs		-	-	-	3
Elective VIII (Professional Elective)							
1	23EC012	Real-Time Systems Design and Analysis	1, 2, 3,PSO1	-	-	-	3
2	23EC013	UHF and EHF communication systems	1, 2, 3,4,PSO2	-	-	-	3
3	23EC014	Computer Architecture	1, 2, 3,PSO1	-	-	-	3
Audit Course							
1	23AT001	Communication Etiquette in Workplaces	-	-	-	-	-
2	23AT002	Contemporary India: Economy, Policy and Society	-	-	-	-	-
3	23AT003	Design The Thinking	-	-	-	-	-
4	23AT004	Ethics and Integrity	-	-	-	-	-
5	23AT005	Indian Heritage and Culture	-	-	-	-	-
6	23AT006	Intellectual Property Rights and Patents	-	-	-	-	-
7	23AT007	Introduction to Journalism	-	-	-	-	-
8	23AT008	Mass Media Communication	-	-	-	-	-
9	23AT009	Science, Technology and Development	-	-	-	-	-
10	23AT010	Social Responsibility	-	-	-	-	-
11	23AT011	The Art of Photography and Film Making	-	-	-	-	-
12	23AT012	Gender Equality for Sustanibity	-	-	-	-	-
13	23AT013	Women in Leadership	-	-	-	-	-
14	23AT014	Introduction to Research Methodology	-	-	-	-	-
15	23AT015	Climate Change and Circular Economy	-	-	-	-	-
B. Tech. (Honors)							
Domain I VLSI Circuit Design and Verification							
01	23ECH11	System on Chip Design	1,2,3,PSO1	4	-	-	4
02	23ECH12	CMOS Logic Circuit Design	1, 2, 3, PSO1	4	-	-	4
03	23ECH13	Low Power VLSI Design	1, 2, 3, PSO1	4	-	-	4
04	23ECH14	VLSI Fabrication Technology	1,2,3, PSO1	4	-	-	4
Domain II Robotics and Automation							
01	23ECH21	Advanced Controllers	1, 2, 3, PSO1	4	-	-	4
02	23ECH22	Robots and Control	1, 2, 3, PSO1	4	-	-	4
03	23ECH23	Industrial Automation	1, 2, PSO1, PSO2	4	-	-	4
04	23ECH24	Distributed Embedded systems	1, 2, 3, PSO1	4	-	-	4
B. Tech. (Minors)							
Communications and Networking							
01	23ECM11	Principles of Communications	1,2, PSO2	4	-	-	4
02	23ECM12	Coding Theory and Practice	1,2, PSO2	4	-	-	4
03	23ECM13	Ad-hoc and Wireless Sensor Networks	1,2,3, PSO2	4	-	-	4
04	23ECM14	Fundamentals of Multimedia Networking	1,2,3, PSO2	4	-	-	4

GMR Institute of Technology
An Autonomous Institute Affiliated to JNTU-GV | GMRIT Training Tomorrow's Engineers Today

23PYX01 - ENGINEERING PHYSICS
(Common to all branches of Engineering)

3 0 0 3

Course Outcomes

1. Interpret the concepts of mechanics to understand the conservative principles
2. Outline the principles of electrostatics, magnetostatics and able to explain electromagnetism
3. Illustrate the concepts of Interference, Diffraction, Polarization and their applications
4. Summarize the fundamental concepts of quantum theory and identify the applications of quantum theory in various contexts
5. Classify solids into conductors, insulators and semiconductors and understand conductivity in intrinsic and extrinsic semiconductors
6. Demonstrate the emission of laser light and their applications in various engineering fields. Interpret and classify optical fibers and their applications in modern communication systems.

COs – POs Mapping

CO's	PO1	PO2	PO3	PO4	PO5	PO6	PO7	PO8	PO9	PO10	PO11	PO12	PSO1	PSO2
CO1	3	2	1			1	1					1		
CO2	3	2	1			1	1					1		
CO3	3	3	2			2	2					2		
CO4	3	3	2			2	2					2		
CO5	3	3	2			2	2					2		
CO6	3	2	1			1	1					1		

3–Strongly linked | 2–Moderately linked | 1–Weakly linked

Unit: I Wave Optics **13 Hours**

Interference: Introduction - Principle of superposition –Interference of light - Interference in thin films (Reflection Geometry) & applications - Colours in thin films- Newton's Rings, Determination of wavelength and refractive index.
Diffraction: Introduction - Fresnel and Fraunhofer diffractions - Fraunhofer diffraction due to single slit, double slit & N-slits (Qualitative) – Diffraction Grating - Dispersive power and resolving power of Grating (Qualitative).
Polarization: Introduction -Types of polarization - Polarization by reflection, refraction and Double refraction - Nicol's Prism -Half wave and Quarter wave plates

UNIT II Crystallography and X-ray diffraction **10 Hours**

Crystallography: Space lattice, Basis, Unit Cell and lattice parameters – Bravais Lattices – crystal systems (3D) – coordination number - packing fraction of SC, BCC & FCC – Miller indices – separation between successive (hkl) planes. *X- ray diffraction*: Bragg's law - X-ray Diffractometer – crystal structure determination by Laue's and powder methods

UNIT III Dielectric and Magnetic **12 Hours**

Dielectric Materials: Introduction - Dielectric polarization - Dielectric polarizability, Susceptibility, Dielectric constant and Displacement Vector –Relation between the electric vectors - Types of polarizations- Electronic (Quantitative), Ionic (Quantitative) and Orientation polarizations (Qualitative) - Lorentz internal field - Clausius- Mossotti equation - complex dilectric constant – Frequency dependence of polarization – dielectric loss
Magnetic Materials: Introduction - Magnetic dipole moment - Magnetization-Magnetic susceptibility and permeability – Atomic origin of magnetism - Classification of magnetic materials: Dia, para, Ferro, anti-ferro & Ferri magnetic materials - Domain concept for Ferromagnetism & Domain walls (Qualitative) - Hysteresis - soft and hard magnetic materials

Unit: IV Quantum Mechanics, Free electron theory and Semiconductors **13 Hours**

Quantum Mechanics: Dual nature of matter – Heisenberg's Uncertainty Principle – Significance and properties of wave function – Schrodinger's time independent and dependent wave equations– Particle in a one-dimensional infinite potential well.
Free Electron Theory: Classical free electron theory (Qualitative with discussion of merits and demerits) – Quantum free electron theory – electrical conductivity based on quantum free electron theory - Fermi-Dirac distribution - Density of states - Fermi energy.
Semiconductors: Semiconductors: Formation of energy bands – classification of crystalline solids – Intrinsic semiconductors: Density of charge carriers – Electrical conductivity – Fermi level – Extrinsic semiconductors: density of charge carriers – dependence of Fermi energy on carrier concentration and temperature - Drift and diffusion currents – Einstein's equation – Hall effect and its applications

Total: 48 hours

Textbooks:

1. A Text book of Engineering Physics - M. N. Avadhanulu, P.G.Kshirsagar& TVS Arun Murthy, S. Chand Publications, 11th Edition 2019.
2. Engineering Physics - M.R. Srinivasan, New Age international publishers (2009).
3. Engineering Physics - B.K. Pandey and S. Chaturvedi, Cengage Learning

Reference Books:

1. Engineering Physics - Shatendra Sharma, Jyotsna Sharma, Pearson Education, 2018.
2. Engineering Physics" - Sanjay D. Jain, D. Sahasrabudhe and Girish, University Press.
3. Engineering Physics - D.K.Bhattacharya and PoonamTandon, Oxford press (2015).

Internal Assessment Pattern

Cognitive Level	Int. Test 1 (%)	Int. Test 2 (%)	Open Book Exam (%)
Remember	40	40	
Understand	50	50	
Apply	10	10	70
Analyze			30
Evaluate			
Create			
Total (%)	100	100	100

Sample Question (s)

Remember

1. Define Polarization of light
2. State Bragg's law of x-ray diffraction
3. Define Bohr magneton
4. List any two merits of classical free electron theory

Understand

1. Draw and explain the variation in intensity in diffraction due to single slit
2. Explain with diagram the Powder method of X-ray diffraction
3. Explain hysteresis behavior of ferromagnetic materials
4. Derive Schrodinger's time dependent wave equation

Apply

1. A parallel beam of light of wavelength 6000 Å is incident on a thin glass plate of refractive index 1.5 such that the angle of refraction into the plate is 50°. Find the least thickness of the glass plate which will appear dark by reflection.
2. Draw and label (1 0 0), (0 2 0), (0 2 2) crystallographic planes.
3. Draw and compare soft and hard magnetic materials based on their hysteresis loops.
4. An electron is confined to a one dimensional potential box of length 2 Å. Calculate the energies corresponding to the second and fourth quantum states in eV.

23CYX01 - CHEMISTRY – EEE, ECE, CSE, IT, AI&ML, AI&DS

3 0 0 3

Course Outcomes

1. Illustrate the different types of polymers and their applications
2. Interpret the Nernst equation for electrode potential and construct various types of energy storage devices
3. Describe corrosion factors and implement prevention measures
4. Estimate the calorific value of a fuel and select a suitable fuel as an energy resource
5. Describe the important renewable energy sources and their usage
6. Explain bonding, colour and magnetic properties of molecules

COs – POs Mapping

CO's	PO1	PO2	PO3	PO4	PO5	PO6	PO7	PO8	PO9	PO10	PO11	PO12	PSO1	PSO2
CO1	3	3	1			1	3					1		
CO2	3	3	1			2	2					1		
CO3	3	3	2			2	3					1		
CO4	3	3	2			2	2					2		
CO5	3	3	2			1	3					2		
CO6	3	3	1			1	2					2		

3–Strongly linked | 2–Moderately linked | 1–Weakly linked

Unit I

Structure and Bonding Models, Modern Engineering materials:

Fundamentals of Quantum mechanics, Schrodinger Wave equation, significance of Ψ (psi) and Ψ^2 (psi square), particle in one dimensional box, molecular orbital theory – bonding in homo- and heteronuclear diatomic molecules – energy level diagrams of O2 and CO, etc. π-molecular orbitals of butadiene and benzene, calculation of bond order.

Semiconductors – Introduction, basic concept, application-Super conductors-Introduction basic concept, applications. Supercapacitors: Introduction, Basic Concept-Classification – Applications **13 Hours**

Unit II

Nano materials & Instrumental methods & applications

Nano materials: Introduction, classification, properties and applications of Fullerenes, carbonnano tubes and Graphines nanoparticles.

Electromagnetic spectrum. Absorption of radiation: Beer-Lambert's law. UV-VisibleSpectroscopy, electronic transition, Instrumentation, IR spectroscopies, fundamental modesand selection rules, Instrumentation. Chromatography-Basic Principle, Classification-HPLC:Principle, Instrumentation and Applications. **10 Hours**

Unit III

Polymer Chemistry & Applications

Introduction to polymers, functionality of monomers, chain growth and step growth, polymerization, coordination polymerization, with specific examples and mechanisms of polymer formation.

Plastics –Thermo and Thermosetting plastics, Preparation, properties and applications of –PVC, Teflon, Bakelite, Nylon-6,6, carbon fibres.

Elastomers–Buna-S, Buna-N–preparation, properties and applications. Conducting polymers – polyacetylene, polyaniline, – mechanism of conduction and applications. Bio-Degradable polymers - Poly Glycolic Acid (PGA), Polyl Lactic Acid (PLA)

Fuel cells, hydrogen-oxygenfuel cell– working of the cells. Polymer Electrolyte Membrane Fuel cells (PEMFC).

16 Hours

Unit IV

Electrochemistry & Applications

Electrochemical sensors – potentiometric sensors with examples, amperometric sensors with examples. Primary cells – Zinc-air battery, Secondary cells –lithium-ion batteries- working of the batteries including cell reactions.

Electrochemical cell, Nernst equation, cell potential calculations and numerical problems, potentiometry-potentiometric titrations (redox titrations), concept of conductivity, conductivity cell, conductometric titrations (acid-base titrations). **09 Hours**

Total: 48 Hours

Textbooks:

1. A Text book of Engineering Physics - M. N. Avadhanulu, P.G.Kshirsagar& TVS Arun Murthy, S. Chand Publications, 11th Edition 2019.
2. Engineering Physics - M.R. Srinivasan, New Age international publishers (2009).
3. Engineering Physics - B.K. Pandey and S. Chaturvedi, Cengage Learning

Reference Books:

1. Engineering Physics - Shatendra Sharma, Jyotsna Sharma, Pearson Education, 2018.
2. Engineering Physics" - Sanjay D. Jain, D. Sahasrabudhe and Girish, University Press.
3. Engineering Physics - D.K.Bhattacharya and PoonamTandon, Oxford press (2015).

Internal Assessment Pattern

Cognitive Level	Int. Test 1 (%)	Int. Test 2 (%)	Open Book Exam
Remember	39	40	
Understand	53	53	
Apply	08	07	50
Analyze			50
Evaluate			
Create			
Total (%)	100	100	100

Sample Question (s)

Remember

1. Write the Schrodinger wave equation?
2. Define nanomaterial with an example
3. Define functionality
4. Write any two applications of PVC

Understand

1. Illustrate the molecular orbital energy level diagram of O_2 molecule
2. Write the classification and applications of carbon nanotubes
3. Illustrate construct and working of Li ion battery
4. What is fuel cell? Explain construction and working of hydrogen-oxygen fuel cell

Apply

1. By using MO rules, draw the π-molecular orbital energy level diagram of 1,3-butadiene
2. Calculate emf of the following cell at 25oC. Given the standard reduction potentials of zinc and copper –0.76 V and +0.37 V respectively. Zn(s) | Zn2+ (0.1M) || Cu2+ (0.001M) | Cu(s).

23CYX02 - ENGINEERING CHEMISTRY – CIVIL, MECH

3 0 0 3

Course Outcomes

1. CO1: Assess the quality of water and its treatment methods
2. CO2: Estimate the potentials for electrochemical cells
3. CO3: Describe corrosion factors and implement prevention methods.
4. CO4: Illustrate the types of polymers and Fuels with applications
5. CO5: Describe the concepts of colloids, micelle and nanomaterials
6. CO6: Explain the uses of refractory materials, lubricants and cements.

COs – POs Mapping

COs	PO_1	PO_2	PO6	PO7	PO_{12}
1	3		1	3	1
2	3		1	2	1
3	3		1	3	1
4	3	1	1	2	1
5	3	1	1	3	1
6	3		1	2	1

3–Strongly linked | 2–Moderately linked | 1–Weakly linked

UNIT I: Water Technology

Soft and hardwater, Estimation of hardness of water by EDTA Method, Estimation of dissolved Oxygen -Boiler troubles –Priming, foaming, scale and sludge, Caustic embrittlement, Industrial water treatment – Specifications for drinking water, Bureau of Indian Standards(BIS) and World health organization(WHO)standards, Ion-exchange processes - desalination of brackish water, reverse osmosis (RO) and electrodialysis

10 Hours

UNIT II: Electrochemistry and Applications

Electrodes –electrochemical cell, Nernst equation, cell potential calculations. Primary cells – Zinc-air battery, Secondary cells – Nickel-Cadmium (NiCad),and lithium ion batteries- working principle of the batteries including cell reactions; Fuel cells-Basic Concepts, the principle and working of hydrogenoxygen Fuel cell. Corrosion: Introduction to corrosion, electrochemical theory of corrosion, differential aeration cell corrosion, galvanic corrosion, metal oxide formation by dry electrochemical corrosion, Pilling Bedworth ratios and uses, Factors affecting the corrosion, cathodic and anodic protection, electroplating and electro less plating (Nickel and Copper).

12 Hours

UNIT III: Polymers and Fuel Chemistry

Introduction to polymers, functionality of monomers, Mechanism of chain growth, step growthpolymerization. Thermoplastics and Thermo-setting plastics-: Preparation, properties and applications ofpoly styrene. PVC Nylon 6,6 and Bakelite. Elastomers – Preparation, properties and applications of BunaS, Buna N, Thiokol rubbers.

Fuels – Types of fuels, calorific value of fuels, numerical problems based on calorific value; Analysis ofcoal (Proximate and Ultimate analysis), Liquid Fuels, refining of petroleum, Octane and Cetanenumberalternativefuels- propane, methanol, ethanol and bio fuel-bio diesel. **10 Hours**

UNIT IV: Surface Chemistry and Modern Engineering Materials

Surface Chemistry- Introduction to surface chemistry, colloids, nanometals and nanometal oxides, micelleformation, synthesis of colloids (Braggs Method), adsorption isotherm (Freundlich and Longmuir), BETequation (no derivation).Nano Materials- Chemical and biological methods of preparation of nanometals and metal oxides,stabilization of colloids and nanomaterials by stabilizing agents, applications of colloids and nanomaterials– catalysis, medicine, sensors, etc.Composites- Definition, Constituents, Classification- Particle, Fibre and Structural reinforced composites,

properties and Engineering applications

Refractories and lubricants- Classification, Properties, Factors affecting the refractory materials andApplications. Lubricants- Classification, Functions of lubricants, Mechanism, Properties of lubricating oils– Viscosity, Viscosity

Index, Flash point, Fire point, Cloud point, saponification and Applications.Building materials- Portland cement, constituents, Setting and Hardening of cement. **16 Hours**

Total: 48 Hours

Textbook (s)

1. P.C. Jain and Monica Jain, Engineering Chemistry,16thEd., DhanpatRai Publishing Company, New Delhi, 2015.
2. Peter Atkins, Julio de Paula and James Keeler, Atkins' Physical Chemistry, 10/e, Oxford University Press, 2010.
3. C.N.R. Rao, A. Muller and A.K. Cheetham, Nanomaterials Chemistry: Recent Developments and New Directions, 2010.

Reference (s)

1. H.F.W. Taylor, Cement Chemistry, 2/e, Thomas Telford Publications, 1997.
2. D.J. Shaw, Introduction to Colloids and Surface Chemistry, Butterworth-Heineman, 1992.
3. Textbookof Polymer Science, Fred W. BillmayerJr, 3rd Edition

Internal Assessment Pattern

Cognitive Level	Int. Test 1 (%)	Int. Test 2 (%)	Open Book/ Assignment Exam(%)
Remember	40	40	--
Understand	50	50	-
Apply	10	10	50
Analyze	-	-	50
Evaluate	-	-	-
Create	-	-	-
Total (%)	100	100	100

Sample Question (s)

Remember

1. Define hardness
2. Differentiate between primary and secondary battery
3. Define Octane and cetane number
4. What are the good characteristic properties of good refractory material?

Understand

1. Explain in detail how the hardwater is purified by ion exchange process
2. How the underground buried pipeline is protected by sacrificial anodic protection?
3. Explain the preparation of Nano metal oxide by chemical precipitation method
4. Explain the chemistry involved in setting and hardening of cement

Apply

1. What are different treatment methods for removal of hardness and compare their merits and demerits
2. What are the points are to be taken into account in the construction of a good battery with life?
3. How to get commercial products obtaining from crude oil and list out the byproducts with carbon content, Boiling point and its uses

23MAX01 - LINEAR ALGEBRA & CALCULUS

3 0 0 3

Course Outcomes: At the end of the course, the student will be able to

1. Solve the system of linear equations
2. Construct the eigenvectors of a matrix, use the applications of Cayley Hamilton theorem
3. Identify the nature of the quadratic form using matrix theory
4. Apply Mean value theorems to solve single variable problems.
5. Make use of partial derivatives to solve multivariable problems
6. Utilize multiple integrals to find the area and volume of solids

COs – POs Mapping

COs	PO1	PO2	PO12
1	3	2	1
2	3	2	1
3	3	2	1
4	3	2	1
5	3	2	1
6	3	2	1

3–Strongly linked | 2–Moderately linked | 1–Weakly linked

UNIT – I

Matrices

Rank of a matrix by echelon form, normal form. Cauchy –Binet formulae (without proof). Inverse of Non- singular matrices by Gauss-Jordan method, System of linear equations: Solving system of Homogeneous and Non-Homogeneous equations by Gauss elimination method, Gauss Seidel Iteration Method. **12 Hours**

UNIT – II

Linear Transformation and Orthogonal Transformation:

Eigenvalues, Eigenvectors and their properties, Diagonalization of a matrix, Cayley-Hamilton Theorem (without proof), finding inverse and power of a matrix by Cayley-Hamilton Theorem, Quadratic forms and Nature of the Quadratic Forms, Reduction of Quadratic form to canonical forms by Orthogonal Transformation. **12 Hours**

UNIT – III

Single and Multi-Variable Calculus

Mean Value Theorems: Rolle's Theorem, Lagrange's mean value theorem with their geometrical interpretation, Cauchy's mean value theorem, Taylor's and Maclaurin theorems with remainders (without proof), Problems and applications on the above theorems.

Partial differentiation: Partial derivatives, total derivatives, chain rule, change of variables, Taylor's and Maclaurin's series expansion of functions of two variables. Jacobians, maxima and minima of functions of two variables, method of Lagrange multipliers. **14 Hours**

UNIT – IV

Multiple Integrals

Double integrals, triple integrals, change of order of integration, change of variables to polar, cylindrical and spherical coordinates. Finding areas (by double integrals) and volumes (by double integrals and triple integrals).

10 Hours

Total: 48 Hours

Textbooks:

1. B. S. Grewal, Higher Engineering Mathematics, 44/e, Khanna Publishers,2017.
2. Erwin Kreyszig, Advanced Engineering Mathematics, 10/e, John Wiley & Sons, 2018.

Reference Books:

1. R. K. Jain and S. R. K. Iyengar, Advanced Engineering Mathematics, 5/e, Alpha Science International Ltd., 2021 (9th reprint).
2. George B. Thomas, Maurice D. Weir and Joel Hass, Thomas Calculus, 14/e, Pearson Publishers, 2018.

3. Glyn James, Advanced Modern Engineering Mathematics, 5/e, Pearson publishers, 2018.
4. Michael Greenberg, Advanced Engineering Mathematics, 9th edition, Pearson edn
5. H. K Das, Er. RajnishVerma, Higher Engineering Mathematics, S. Chand,2021.

Internal Assessment Pattern

Cognitive Level	Int. Test 1 (%)	Int. Test 2 (%)	Assignment Test (%)
Remember	10	10	-
Understand	40	40	20
Apply	50	50	50
Analyze	-	-	30
Evaluate	-	-	-
Create	-	-	-
Total (%)	100	100	100

Sample Question (s)

Remember

1. Define rank of a matrix
2. State Cayley-Hamilton theorem
3. State Rolle's theorem
4. State Taylor's theorem

Understand

1. Find the rank of the matrix $A = \begin{bmatrix} 5 & 6 \\ 7 & 8 \end{bmatrix}$ by reducing it to echelon form.
2. Using Cayley-Hamilton theorem find A^4, for $A = \begin{bmatrix} 1 & 2 \\ 2 & -1 \end{bmatrix}$
3. Verify Lagrange's mean value theorem for $(x)^{\frac{3}{4}}$ in [-1,2]
4. Evaluate $\int_0^a \int_0^{\sqrt{a^2-x^2}} \sqrt{a^2 - x^2 - y^2}\, dxdy$

Apply

1. Utilise Gauss-Jordan method, to find the inverse of the matrix $\begin{bmatrix} 1 & 1 & 3 \\ 1 & 3 & -3 \\ -2 & -4 & -4 \end{bmatrix}$
2. Find the eigen values and the corresponding eigen vectors of $A = \begin{bmatrix} 1 & 2 & -1 \\ 0 & 2 & 2 \\ 0 & 0 & -2 \end{bmatrix}$
3. If $a < b$, prove that $\frac{b-a}{1+b^2} < \tan^{-1} b - \tan^{-1} a < \frac{b-a}{1+a^2}$ using Lagrange's mean value theorem. Deduce that $\frac{5\pi+4}{20} < \tan^{-1} 2 < \frac{\pi+2}{4}$
4. Evaluate $\int_0^\infty \int_0^\infty e^{-(x^2+y^2)}\, dxdy$ by change into polar coordinates

23BEX01 BASIC ELECTRICAL & ELECTRONICS ENGINEERING
(Common to all branches of Engineering)

3 0 0 3

Course Outcomes

1. Demonstrate the electrical parameters of DC & AC circuits.
2. Illustrate the operation of electrical machines and power plants.
3. Summarize electrical measurements and safety measures
4. Explain the operation of semiconductor devices and their characteristics.
5. Illustrate the operation of rectifiers.
6. Illustrate the number systems, binary codes, and combinational circuits using logic gates.

COs – POs Mapping

COs	PO1	PO3	PO6	PO7	PO9	PO12
CO1	3	2	1	1	1	1
CO2	3	2	1	1	1	1
CO3	3	2	1	1	1	1
CO4	3	2	1	1	1	1
CO5	3	2	1	1	1	1
CO6	3	2	1	1	1	1

3–Strongly linked | 2–Moderately linked | 1–Weakly linked

PART A: BASIC ELECTRICAL ENGINEERING

UNIT I: ELECTRICAL CIRCUITS AND MACHINES

DC Circuits: Electrical circuit elements (R, L and C), Ohm's Law and its limitations, KCL & KVL, series, parallel, series-parallel circuits, Super Position theorem, Simple numerical problems.

AC Circuits: AC Fundamentals: Equation of AC Voltage and current, waveform, time-period, frequency, amplitude, phase, phase difference, average value, RMS value, form factor, peak factor. (Simple Numerical problems).

Electrical Machines: Construction, principle and operation of (i) DC Motor, (ii) DC Generator, (iii) Single Phase Transformer and (iv) Three Phase Induction Motor**,** Applications of electrical machines.

(12 Hours)

UNIT II: ELECTRICAL MEASURING INSTRUMENTS AND SAFETY MEASURES

Measuring Instruments: Construction and working principle of Permanent Magnet Moving Coil (PMMC), Moving Iron (MI) Instruments and Wheat Stone bridge.

Energy Resources: Conventional and non-conventional energy resources; Layout and operation of various Power Generation systems: Hydel, Nuclear, Solar & Wind power generation.

Electricity bill: Power rating of household appliances including air conditioners, PCs, Laptops, Printers, etc. Definition of "unit" used for consumption of electrical energy, calculation of electricity bill for domestic consumers.

Equipment Safety Measures: Working principle of Fuse and Miniature circuit breaker (MCB) Personal safety measures: Electric Shock, Safety precautions to avoid shock, Earthing and its types.

(12 Hours)

PART B: BASIC ELECTRONICS ENGINEERING

UNIT III: SEMICONDUCTOR DEVICES AND ELECTRONIC CIRCUITS

Introduction - Evolution of electronics – Vacuum tubes to nanoelectronics - Characteristics of PN Junction Diode — Zener Effect — Zener Diode and its Characteristics. Bipolar Junction Transistor — CB, CE, CC Configurations and Characteristics — Elementary Treatment of Small Signal CE Amplifier.

Rectifiers and power supplies: Block diagram description of a DC power supply, working of a half wave rectifier, full wave rectifier.

(12 Hours)

UNIT IV: DIGITAL ELECTRONICS

Overview of Number Systems, Logic gates including Universal Gates, BCD codes, Excess-3 code, Gray code. Boolean Algebra, Basic Theorems and properties of Boolean Algebra, Truth Tables and Functionality of Logic Gates – NOT, OR, AND, NOR, NAND, XOR and XNOR. Simple combinational circuits– Minterm, Maxterm, SOP, Standard SOP, POS, Standard POS, 3-Variable K-Map, Half and Full Adders.

(12 Hours)

Textbooks:

1. R. L. Boylestad & Louis Nashlesky, "Electronic Devices & Circuit Theory," Pearson Education, 2nd Edition 2021.
2. D. C. Kulshreshtha "Basic Electrical Engineering" Tata McGraw Hill, 1st Edition, 2019
3. Ramana Pilla, N.V.Lalitha & G.Suresh, "Basic Electrical and Electronics Engineering", S Chand and Company Ltd., 1st Edition, 2024.

Reference Books:

1. Basic Electrical Engineering, D. P. Kothari and I. J. Nagrath, Mc Graw Hill, 2019, Fourth Edition
2. T. K. Nagsarkar & M. S. Sukhija, "Basic Electrical Engineering" Oxford University Press, 1st Edition, 2017
3. R. P. Jain, "Modern Digital Electronics" Tata Mc Graw Hill, 4th Edition, 2009.
4. Rajendra Prasad, "Fundamentals of Electrical Engineering," PHI publishers, 3rd Edition. 2014

Internal Assessment Pattern

Cognitive Level	Int. Test 1 (%)	Int. Test 2 (%)	Assignment Test (%)
Remember	20	20	30
Understand	50	50	50
Apply	30	30	20
Analyze	-	-	
Evaluate	-	-	-
Create	-	-	-
Total (%)	100	100	100

Sample Question (s)

Remember

1. Define KVL and KCL
2. Define Units
3. Define amplifier
4. Define Rectifier

Understand

1. List out energy sources and explain anyone with a neat diagram
2. Illustrate the operation instruments with a neat diagram
3. List any three applications of Zener diode
4. Illustrate the CE amplifier circuit diagram.

Apply

1. Find currents in each branch using nodal analysis for the given circuit.

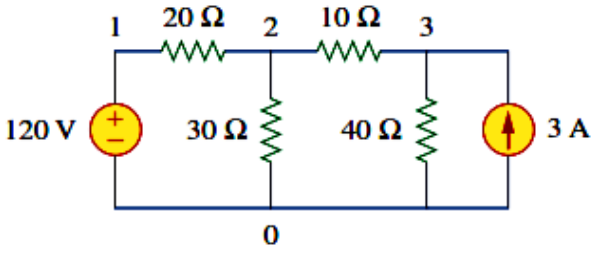

2. Find I by using the superposition theorem for the below circuit with V_S=20V, I_S= 4A.

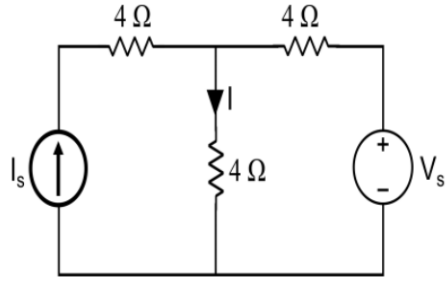

3. Solve these conversions
   i) $(10101)_2$ to $(?)_{gray}$
   ii) (23B) to $(?)_{10}$
   iii) $(45)_{10}$ to $(?)_8$

4. Minimize the given switching function using k-map f(A, B, C) = $\sum m(2,6,7)$

23BEX02 - BASIC CIVIL & MECHANICAL ENGINEERING

(Common to All branches of Engineering)

3 0 0 3

Course Outcomes:

1. Describe the basics of civil engineering streams, water resources and environmental engineering
2. Outline the concepts of surveying
3. Demonstrate the pavements and the concept of Airport, Harbour, Tunnel & Railway Engineering
4. Understand the different Engineering Materials, Manufacturing process and the role of mechanical Engineering in different sectors.
5. Understand the basic concepts of thermal engineering and working principles of different power plants
6. Describe the working of different mechanical power transmission systems and basic configurations and applications of robots

COs – POs Mapping

CO	PO_1	PO2	PO3	PO6	PO7	PO8	PO_{12}
1	3	-	-	2	2	2	2
2	3	3	3	1	2	-	2
3	3	-	-	1	2	-	2
4	3	-	-	2	2	-	2
5	3	-	-	2	2	-	2
6	3	-	-	2	2	-	2

3–Strongly linked | 2–Moderately linked| 1–Weakly linked

UNIT I Basics of Civil Engineering

Basics of Civil Engineering: Role of Civil Engineers in Society- Various Disciplines of Civil Engineering- Structural Engineering- Geo-technical Engineering- Transportation Engineering- Hydraulics and Water Resources Engineering - Environmental Engineering-Scope of each discipline - Building Construction and Planning- Construction Materials- Cement - Aggregate - Bricks- Cement concrete- Steel. Introduction to prefabricated construction techniques.

Water Resources and Environmental Engineering: Introduction, Sources of water- Quality of water- Specifications- Introduction to Hydrology–Rainwater Harvesting-Water Storage and Conveyance Structures (Simple introduction to Dams and Reservoirs).

12 Hours

UNIT II Surveying and Transportation Engineering

Surveying: Objectives of Surveying - Horizontal Measurements- Angular Measurements- Introduction to Bearings, Levelling instruments used for levelling -Simple problems on levelling and bearings-Contour mapping.

Transportation Engineering: Importance of Transportation in Nation's economic development- Types of Highway Pavements- Flexible Pavements and Rigid Pavements - Simple Differences. Basics of Harbour, Tunnel, Airport, and Railway Engineering **12 Hours**

UNIT III

Introduction to Mechanical Engineering: Role of Mechanical Engineering in Industries and Society-Technologies in different sectors such as Energy, Manufacturing, Automotive, Aerospace, and Marine sectors.

Engineering Material: Metals-Ferrous and Non-ferrous, Ceramics, Composites, Smart materials.

Manufacturing Processes: Principles of Casting, Forming, joining processes, Introduction to CNC machines, 3D printing, and Smart manufacturing. **11 Hours**

UNIT IV

Thermal Engineering: working principle of Boilers, Otto cycle, Diesel cycle, Refrigerator and air-conditioner, IC engines, 2-Stroke and 4-Stroke engines, SI/CI Engines, Components of Electric and Hybrid Vehicles.

Power plants: working principle of Steam, Diesel, Hydro, Nuclear power plants.

Mechanical Power Transmission: Belt Drives, Chain, Rope drives, Gear Drives and their applications.

Introduction to Robotics: configurations and applications of robots. **13 Hours**

Textbooks:

1. Basics of Civil and Mechanical Engineering, O. Srikanth and M. Sreenivasa Reddy, S. Chand and company limited, first edition, 2024.
2. Basic Civil Engineering, M. S. Palanisamy, Tata Mcgraw Hill publications (India) Pvt. Ltd. Fourth Edition.
3. Introduction to Civil Engineering, S. S. Bhavikatti, New Age International Publishers. 2022. First Edition.
4. Basic Civil Engineering, SatheeshGopi, Pearson Publications, 2009, First Edition.
5. Internal Combustion Engines by V.Ganesan, By Tata McGraw Hill publications (India) Pvt. Ltd.
6. A Text book of Theory of Machines by S.S. Rattan, Tata McGraw Hill Publications, (India) Pvt. Ltd.
7. An introduction to Mechanical Engg by Jonathan Wicker and Kemper Lewis, cengage learning India pvt. Ltd.

Reference Books:

1. Surveying, Vol- I and Vol-II, S.K. Duggal, Tata McGraw Hill Publishers 2019. Fifth Edition.
2. Hydrology and Water Resources Engineering, Santosh Kumar Garg, Khanna Publishers, Delhi. 2016.
3. Irrigation Engineering and Hydraulic Structures - Santosh Kumar Garg, Khanna Publishers, Delhi 2023. 38th Edition.
4. Highway Engineering, S. K. Khanna, C.E.G. Justo and Veeraraghavan, Nemchand and Brothers Publications 2019. 10th Edition.
5. Indian Standard DRINKING WATER — SPECIFICATION IS 10500-2012.
6. AppuuKuttan KK, Robotics, I.K. International Publishing House Pvt. Ltd. Volume-I
7. 3D printing & Additive Manufacturing Technology- L. Jyothish Kumar, Pulak M Pandey, Springer publications
8. Thermal Engineering by Mahesh M Rathore Tata Mcgraw Hill publications (India) Pvt. Ltd.
9. G. Shanmugam and M.S.Palanisamy, Basic Civil and the Mechanical Engineering, Tata Mcgraw Hill publications (India) Pvt. Ltd.

Internal Assessment Pattern

Cognitive Level	Int. Test 1 (%)	Int. Test 2 (%)	Lab Assessments
Remember	9	9	9
Understand	63	63	63
Apply	28	28	28
Analyze			
Evaluate			
Create			
Total (%)	100	100	

Sample Question (s)

Remember

1. What is Portland cement? Write the Cement composition?
2. Define surveying. What are the principles of surveying?
3. Outline the key elements of railway engineering?
4. Write the purpose of tunnels?

Understand

1. Describe the key characteristics of contour mapping?
2. Discuss the fundamental differences between flexible pavements and rigid pavements.
3. What are the various types of transportation system? How the transportation is contributing the economy of the country India?
4. What is the importance of construction materials such as brick, cement, aggregates, concrete and steel in building construction?

Apply

1. The following readings were taken with a level in sequence as follows 1.625, 1.535, 2.365, 1.355, 1.465, 1.105, 1.925, 2.015, 2.350, 1.815, 1.985, 2.115 and 2.560. The elevation of B.M at 1st reading is 210m. Find the reduced levels at each and every station using rise and fall method.

2. In a closed traverse the following bearings were observed with a compass. Calculate the included angles with sketch?

Line	Fore bearing
AB	65° 00′
BC	125° 30′
CD	200° 00′
DE	265° 15′
EA	330° 00′

3. Convert the following whole circle bearings into reduced (quadrantal) bearings?
(i) 65° (ii) 143° 15′ (iii) 252° 30′ (iv) 320° 42′ (v) 181° 12′ (vi) 270° 42′

4. The following fore bearings were observed for lines, AB, BC, CD, DE, FE and FG respectively. Determine their back bearings.

i) FB of AB 310° 30′
ii) FB of BC 145° 15′
iii) FB of CD 210° 30′
iv) FB of DE 60° 45′
v) FB of EF 39° 50′
vi) FB of FG 289° 30′

23BEX03 - INTRODUCTION TO PROGRAMMING
(Common to all branches of Engineering)

3 0 0 3

Course Outcomes

1. Explain and illustrate aspects of the problem-solving using algorithm, flowchart
2. Demonstrate conditional and iterative statements to write programs
3. Understand and apply the concepts of arrays and user defined functions
4. Describe and apply the concepts of pointers and structures
5. Understand and apply the file manipulation functions to handle data files
6. Solve problems of varying complexity by developing programs in C

COs – POs Mapping

CO's	PO1	PO2	PO3	PO4	PO5	PO6	PO7	PO8	PO9	PO10	PO11	PO12	PSO1	PSO2
CO1	3	3	3			3						2		
CO2	3	3	3			2						2		
CO3	3	3	3			2						2		
CO4	3	3	3			3						2		
CO5	2	2	2			2						2		
CO6	2	2	2			2						2		

3–Strongly linked | 2–Moderately linked | 1–Weakly linked

UNITI

Introduction to Computer Problem Solving:

Programs and Algorithms, Computer Problem Solving Requirements, Phases of Problem Solving,
Problem Solving Strategies, Top-Down Approach, Algorithm Designing, Program Verification, Improving Efficiency, Algorithm Analysis and Notations.
Introduction, Structure of a C Program, Comments, Keywords, Identifiers, Data Types, Variables, Constants, Input/output Statements. Operators, Type Conversion Relational Expressions

UNITII

Introduction to C Programming:

Control Flow, Conditional Branching Statements: if, if-else, if-else—if, switch. Basic Loop Structures: while, do-while loops, for loop, nested loops, The Break and Continue Statements, goto statement.

Arrays:

Introduction, Operations on Arrays, Arrays as Function Arguments, Two Dimensional Arrays, Multidimensional Arrays.
Strings: String Fundamentals, String Processing with and without Library Functions, Pointers and Strings.

UNIT- III

Functions: Introduction Function: Declaration, Function Definition, Function Call, Categories of Functions, Passing Parameters to Functions, Scope of Variables, Variable Storage Classes, Recursion.
Pointers: Concept of a Pointer, Declaring and Initializing Pointer Variables, Pointer Expressions and Address Arithmetic, Null Pointers, Generic Pointers, Pointers as Function Arguments, Pointers and Arrays, Pointer to Pointer, Dynamic Memory Allocation, Dangling Pointer, Command Line Arguments.

UNIT-IV

Structures, Unions, Bit Fields: Introduction, Nested Structures, Arrays of Structures, Structures and Functions, Self-Referential Structures, Unions, Enumerated Data Type —Enum variables, Using Type def keyword, Bit Fields. Data Files: Introduction to Files, Using Files in C, Reading from Text Files, Writing to Text Files, Random File Access.

Textbook(s)

1. A Structured Programming Approach UsingC, Forouzan, Gilberg, 3rd Edition, Cengage.
2. How to solve it by Computer. G. Dromey, 12thEdition, Pearson Education.
3. Programming In CA-Practia1Approach.AjayMittal, 1st Edition Pearson

References:

1. Byron Gottfried, Schaum's Outline of Programming with C, 4thEdition, 2020, McGraw-Hill.
2. ComputerProgramming.ReemaThareja, 3rd Edition, 2023, Oxford University Press
3. The C Programming Language, Dennis Richie And Brian Kernighan, 2nd Edition, Pearson Education.
4. Programming InC, Ashok Kamthane,2nd Edition,PearsonPublication.

Internal Assessment Pattern

Cognitive Level	Int. Test 1 (%)	Int. Test 2 (%)	Lab Assessments
Remember	20	10	
Understand	50	40	
Apply	30	30	100
Analyze	--	20	
Evaluate			
Create			
Total (%)			

Sample Question (s)

Remember
1. Define an algorithm.
2. List out the types of operators.
3. Define a function.
4. List any 5 file handling functions.

Understand
1. What is a 2D array? Explain the process of creating, initializing and accessing the elements of a 2D array.
2. Explain the 4 categories of functions.
3. Explain the difference between structure and union.
4. Explain the modes of opening a file.

Apply
1. Write a program to generate the Fibonacci sequence using recursion.
2. Write a program to perform matrix multiplication.
3. Write a program to copy the contents of

23BEX04 - ENGINEERING GRAPHICS
(Common to All branches of Engineering)

2 0 2 3

Course Outcomes

1. Understand the principles of engineering drawing, including engineering curves, scales.
2. Draw and interpret orthographic projections of points, lines, planes in front, top and side views.
3. Construct Ortho-graphic projections of planes inclined to both reference planes and Projections of Solids in simple positions.
4. Understand and apply concepts of projections of solids inclined to a reference plane and sectional views of solids in simple positions using CAD software.
5. Gain a clear understanding of the principles behind development of surfaces and to understand how to unfold basic geometric shapes into flat patterns using CAD software.
6. Develop the ability to draw isometric views and orthographic views and convert isometric views to orthographic views and vice versa using CAD software.

COs – POs Mapping

CO	PO_1	PO_5	PO_{10}	PO_{12}
1	3	-	3	3
2	3	-	3	3
3	3	-	3	3
4	3	3	3	3
5	3	3	3	3
6	3	3	3	3

3 – Strongly linked | 2 – Moderately linked | 1 – Weakly linked

UNIT I

Introduction: Lines, Lettering and Dimensioning, Geometrical Constructions and Constructing regular polygons by general methods.

Curves: construction of ellipse, parabola and hyperbola by general and special methods – Arcs of circle method, concentric circles method, Oblong method, Rectangle method, Normal and tangent to Curves. **Scales:** Introduction to scales, Plain scales, Diagonal scales. **9 Hours**

UNIT II

Projections of Points &Straight Lines: Projections of points, Projections of straight lines parallel to both reference planes, perpendicular to one reference plane and parallel to other reference plane, inclined to one reference plane and parallel to the other reference plane. Projections of Straight Line Inclined to both the reference planes.

Projections of Planes: regular planes Perpendicular to both reference planes, parallel to one reference plane and inclined to the other reference plane; plane inclined to both the reference planes. **Projections of Solids:** Types of solids: Polyhedra and Solids of revolution. Projections of solids in simple positions: Axis perpendicular to horizontal plane, Axis perpendicular to vertical plane.

(Conventional drawing up to this) **9 Hours**

(Using CAD)

UNIT III

Projections of Solids

Introduction to AUTOCAD, Projection of Solids with axis inclined to one reference plane and parallel to other, Projection of Solids with axis parallel to both the reference planes.

Sections of Solids: Perpendicular and inclined section planes, Sectional views and True shape of section, Sections of solids in simple position only.

Development of Surfaces: Methods of Development: Parallel line development and radial line development. Development of a cube, prism, cylinder, pyramid and cone. **10 Hours**

UNIT IV

Conversion of Views: Conversion of isometric views to orthographic views; Conversion of orthographic views to isometric views. **10 Hours**

Total: 48 Hours

Textbook:

1. N. D. Bhatt, Engineering Drawing, Charotar Publishing House, 2016. **Reference Books:**
1. Engineering Drawing, K.L. Narayana and P. Kannaiah, Tata McGraw Hill, 2013.
2. Engineering Drawing, M.B.Shah and B.C. Rana, Pearson Education Inc,2009.
3. Engineering Drawing with an Introduction to AutoCAD, Dhananjay Jolhe, Tata McGraw Hill, 2017.

23HSX01 COMMUNICATIVE ENGLISH
(Common to all branches of Engineering)

2 0 0 2

Course Outcomes

1. Develop effective listening skills for better comprehension of English spoken in different social and workplace contexts.
2. Compose speech clearly on a specific topic using appropriate language in informal discussions
3. Explain the implicit and explicit meanings of a text while reading
4. Summarize the texts of reading and listening based on comprehension
5. Construct sentences using proper grammatical sentence structures
6. Choose and use the appropriate vocabulary, phrases in different contexts

COs – POs Mapping

CO's	PO1	PO2	PO3	PO4	PO5	PO6	PO7	PO8	PO9	PO10	PO11	PO12	PSO1	PSO2
CO1	1					1				3	1	2		
CO2	1					1				3	2	3		
CO3	1					1				3	2	3		
CO4	1					2				3	2	3		
CO5	1					2				3	1	3		
CO6	1					2				3	1	2		

3–Strongly linked | 2–Moderately linked| 1–Weakly linked

Unit I

Lesson : The power of plate of Rice- Ifeoma Okoye

Listening: Identifying the topic, the context and specific pieces of information by listening to Short audio texts and answering a series of questions.

Speaking: Asking and answering general questions on familiar topics such as home, family, work, studies and interests; introducing oneself and others.

Reading: Skimming to get the main idea of a text; scanning to look for specific pieces of information.

Writing: Mechanics of Writing-Capitalization, Spellings, Punctuation-Parts of Sentences

Grammar: Parts of Speech, Basic Sentence Structures-forming questions

Vocabulary: Synonyms, Antonyms, Affixes (Prefixes/Suffixes), Root words

Unit 2

Lesson: Night of the Scorpion by Nissim Ezekiel, Steve Jobs

Listening: Answering a series of questions about main ideas and supporting ideas after listening to audio texts. Listening for global comprehension and summarizing what is listened

Speaking: Discussion in pairs/small groups on specific topics followed by short structure talks and reporting what is discussed

Reading: Identifying sequence of ideas; verbal techniques that connect ideas in a paragraph, reading a text by making inferences-using context clues for comprehension.

Writing: Structure of a paragraph - Paragraph writing (specific topics), summarizing

Grammar: Cohesive devices -linkers, use of articles and zero article, prepositions.

Vocabulary: Homonyms, Homophones, Homographs.

Unit 3

Lesson: The Toys of Peace by Saki

Listening: Making predictions while listening to conversations/ transactional dialogues without video; listening with video.

Speaking: Role plays for practice of conversational English in academic contexts (formal and informal) - asking for and giving information/directions.

Reading: Studying the use of graphic elements in texts to convey information, reveal trends/patterns/relationships, communicate processes or display complicated data.

Writing: Note-making, paraphrasing Letter Writing: Official Letters, Resumes

Grammar: Verbs – tenses, subject-verb agreement Reporting verbs, Direct & Indirect speech, Active & Passive Voice

Vocabulary: Words often confused, Compound words, Collocations

Unit 4

Lesson: The Power of Interpersonal Communication

Listening: Identifying key terms, understanding concepts and answering a series of relevant questions that test comprehension.
Speaking: Formal oral presentations on topics from academic on texts
Reading: Reading comprehension.
Writing: Writings structured essays on specific topics.
Grammar: Editing short texts –identifying and correcting common errors in grammar and usage (articles, prepositions, tenses, subject-verb agreement)
Vocabulary: Jargons, Technical vocabulary

Textbook (s)

1. *Pathfinder*: Communicative English for Undergraduate Students, 1st Edition, Orient Black Swan, 2023.
2. *Empowering English* by Cengage Publications, 2023

Reference Books:

1. Dubey, Sham Ji& Co. English for Engineers, Vikas Publishers, 2020
2. Bailey, Stephen. Academic writing: A Handbook for International Students. Routledge, 2014.
3. Murphy, Raymond. English Grammar in Use, Fourth Edition, Cambridge University Press, 2019.
4. Lewis, Norman. Word Power Made Easy- The Complete Handbook for Building a Superior Vocabulary.

Internal Assessment Pattern

Cognitive Level	**Int. Test 1 (%)**	**Int. Test 2 (%)**	Open Book Exam (%)
Remember	20%	20%	
Understand	29%	29%	
Apply	51%	51%	50%
Analyse			50%
Evaluate			
Create			
Total (%)			

Sample Question (s)

Remember

1. Explain the role of body language in inferential listening.
2. What announcement by the national peace council does Eleanor show her brother?
3. Reflect on the role of intrapersonal communication in personal growth, how can engaging in self-reflection and self-talk contribute in enhancing one's character and decision-making abilities?
4. Explain the role of body language in inferential listening.

Understand

1. What do you mean by listening for main ideas and supporting ideas?
2. What are the qualities of a good listener?
3. You recently have purchased a smartphone that has unexpectedly poor battery life. Compose a letter to the customer service department of the store where you bought it, explaining the issue and politely requesting a replacement or repair.
4. Explain briefly some situations that require inferential listening.

Apply

1. Write a short talk on 'memorable incident in your life'
2. Develop a conversation between two friends on positive impact that regular physical exercise can have on both physical and mental well-being.
3. Summarize the central idea of the poem *Night of the Scorpion by Nissim Ezekel.*
4. Imagine you are a customer support representative dealing with a dissatisfied customer. Create a role-playing scenario to address the customer's concerns and resolve the issue to their satisfaction.

23PYX02 - ENGINEERING PHYSICS LAB
(Common to all branches of Engineering)

0 0 2 1

Course Outcomes

1. Infer the knowledge from the scientific methods and learn the process of measuring different physical parameters
2. Develop the laboratory skills in handling of electrical and Optical instruments
3. Demonstrate the interference and diffraction phenomena of light
4. Inspect and experience physical principles of Magnetic fields and optical fiber communications
5. Apply the principles of physics and measure the solid state properties of materials
6. Design and analyze experiment based on physics concepts

COs – POs Mapping

CO's	PO1	PO2	PO3	PO4	PO5	PO6	PO7	PO8	PO9	PO10	PO11	PO12	PSO1	PSO2
CO1	3	1	3	3	2				2		2	1		
CO2	3	1	3	3	3				3		2	2		
CO3	3	1	3	3	1				2		2	2		
CO4	3	3	3	3	3				3		2	2		
CO5	3	3	3	3	3				3		2	1		
CO6	3	3	3	3	3				2		2	1		

3–Strongly linked | 2–Moderately linked | 1–Weakly linked

List of Experiments:

1. Study of variation of magnetic field along the axis of current-carrying circular coil-Stewart and Gee's Method.
2. Determination of wavelengths of spectral line of mercury spectrum using diffraction grating.
3. Determination of radius of curvature of convex lens by forming Newton's rings.
4. Study of series and parallel Resonance in LCR circuit.
5. Measurement of thickness of a thin paper using wedge method.
6. Calculation of Numerical Aperture (NA) and bending losses of a given fiber.
7. Determination of frequency of an electrically vibrating tuning fork in Transverse and longitudinal modes - Melde's Experiment.
8. Determination of wavelength of Laser by diffraction grating.
9. Determination of Hall Coefficient and charge carrier density of semi-conductor.
10. Determination of Band gap of a semiconductor.
11. Determination of Rigidity modulus of a given wire using torsional pendulum.
12. Determination of size of particle using diffraction pattern.
13. Verification of Malu's law.
14. Determination of temperature coefficients of a thermistor.
15. Determination of dispersive power of the material of a prism.
16. Determination of Time constant of an R-C circuit.

List of Augmented Experiments[1]

1. To study the magnetization (M) of a ferromagnetic material in the presence of a magnetic field B and to plot the hysteresis curve (M vs. B)
2. Study the Thermoemf of the thermo couple
3. LCR Series and Parallel–Design of circuit for various resonance frequencies
4. Determination of characteristics of Laser beam
5. Determination of Horizontal component of earth's magnetic field
6. Study of double refraction in calcite crystals
7. Dispersive power of various liquids using spectrometer 8. Photo cell–Characteristics and determination of Planks constant

[1] Students shall opt any one of the Augmented Experiments in addition to the regular experiments

9. Michelson's interferometer.

References:

1. Physics Lab manual–Department of Physics, BS & H, GMRIT, Rajam, 2019
2. S. Balasubramanian, M.N. Srinivasan "A Text book of Practical Physics"- S Chand Publishers, 2017
3. Y. Aparna and K. Venkateswararao, Engineering Physics–I and II, VGS Techno series, 2010 4. S. Panigrahi and B. Mallick, Engineering Practical Physics, Cengage leaning, Delhi, 2015
4. http://www.amrita.vlab.co.in Virtual Labs, Amrita University.
5. http:/www./iitk.vlab.co.in

23CYX03 - CHEMISTRY LAB – EEE, ECE, CSE, IT, AI&ML, AI&DS

0 0 2 1

Course Outcomes

1. Utilize different Analytical tools and execute experiments involving estimation of raw materials, finished products and environmental samples etc.
2. Utilize modern instruments like ion analyzer, UV Vis spectrophotometer for characterization of materials used in industry & environment
3. Determine the amount of fluoride present in water for its quality in drinking purpose
4. Estimate the acid number of oil and assess its suitability as a lubricant.
5. Prepare a cross-linked & thermosetting polymer - Bakelite
6. Identify the adulteration of food items such as milk, honey, tea, coffee

COs – POs Mapping

CO's	PO1	PO2	PO3	PO4	PO5	PO6	PO7	PO8	PO9	PO10	PO11	PO12	PSO1	PSO2
CO1	3	1	3	3	2		3		3		1	1		
CO2	3	1	3	3	3		3		3		2	2		
CO3	3	1	3	3	1		3		3		2	2		
CO4	3	3	3	3	3		2		2		2	2		
CO5	3	3	3	3	3		3		3		1	1		
CO6	3	3	3	3	3		3		3		1	1		

3–Strongly linked | 2–Moderately linked | 1–Weakly linked

LIST OF EXERCISES:

1. Introduction to qualitative analysis- Demonstration
2. Measurement of 10Dq by spectrophotometric method
3. Conductometric titration of strong acid vs. strong base
4. Conductometric titration of weak acid vs. strong base
5. Determination of cell constant and conductance of solutions
6. Potentiometry - determination of redox potentials and emfs
7. Determination of Strength of an acid in Pb-Acid battery
8. Preparation of a Bakelite
9. Verify Lambert-Beer's law
10. Wavelength measurement of sample through UV-Visible Spectroscopy
11. Identification of simple organic compounds by IR
12. Preparation of nanomaterials by precipitation method
13. Estimation of Ferrous Iron by Dichrometry
14. Determination of acid number of lubricating oil
15. Determination of Hardness of a groundwater sample.
16. Determination of Viscosity of lubricating oil by Redwood Viscometer 1

List of Augmented Experiments1

1. Assessment of synthesis of carbon fibers by polymerization
2. Synthesis of nanomaterials by other nanomethodlogy
3. Identification of simple organic compounds by IR
4. Making a battery of required potential
5. Calculation of Ferrous Iron by Dichrometry.
6. Find the acid number of various industrial oils or edible oils

Reference Books

1. Vogel's Quantitative Chemical Analysis 6th Edition 6th Edition" Pearson Publications by J. Mendham, R.C. Denney, J.D. Barnes and B. Sivasankar

23CYX04 - ENGINEERING CHEMISTRY LAB – CIVIL, MECH

0 0 2 1

Course outcomes:

At the end of course student will be able to
CO1: Asses the percentage moisture of a solid fuel
CO2: Prepare the Bakelite polymer and ZnO nanomaterial
CO3: Determine acid number and viscosity of lubricating oil
CO4: Estimate the Iron and Calcium in cement.
CO5: Estimate the hardness and dissolved oxygen in water.
CO6: Determine the Strength of an acid in lead acid Battery

COs – POs Mapping

COs	PO_1	PO6	PO7	PO9	PO_{12}
1	3	1	3	1	1
2	3	1	3		1
3	3	1	3	1	1
4	3	1	2		1
5	3	1	3		1
6	3	1	3		1

3–Strongly linked | 2–Moderately linked | 1–Weakly linked

LIST OF EXERCISES:

1. Introduction to Quantitative Analysis - Demonstration
2. Determination of Hardness of a groundwater sample.
3. Estimation of Dissolved Oxygen by Winkler's method
4. Determination of Fluoride in water sample
5. Determination of nitrite in water sample by spectrometric method
6. Determination of percentage of Iron in Cement sample by colorimetry
7. Estimation of Calcium in Portland cement
8. Determination of Strength of an acid in Pb-Acid battery 9. Preparation of a polymer (Bakelite)
10. Preparation of nanomaterials by precipitation method
11. Adsorption of acetic acid by charcoal
12. Determination of percentage Moisture content in a coal sample
13. Determination of acid number of lubricating oil
14. Determination of Viscosity of lubricating oil by Redwood Viscometer 1
15. Determination of Viscosity of lubricating oil by Redwood Viscometer 2
16. Determination of Calorific value of gases by Junker's gas Calorimeter

List of Augmented Experiments1

1. Assessment of ground water quality of your village/Mandal (by taking min. 6 locations and determining min. 4 parameters – Fluoride, Chloride, Hardness, TDS etc.)
2. Preparation of a desired quality of Viscosity Index lubricating oil
3. Proximate analysis of coal – Ultimate analysis of coal
4. Making a battery of required potential
5. Energy scenario in India- Various sources, % consumption, solutions to meet future demand etc.
6. Find the viscosity of various edible and non-edible lubricating oils

Reference Books

1. Vogel's Quantitative Chemical Analysis 6th Edition 6th Edition" Pearson Publications by J. Mendham, R.C. Denney, J.D. Barnes and B. Sivasankar
2. Waste Water Engineering Treatment and Reuse, 4th Edition, Metcalf and Eddy, Inc
3. Engineering chemistry laboratory manual & record By Srinivasulu D. Parshva publications

23BEX05 - ELECTRICAL & ELECTRONICS ENGINEERING WORKSHOP
(Common to All branches of Engineering)

0 0 3 1.5

Course Outcomes

1. Apply fundamental electrical principles to resolve complex circuit problems.
2. Develop proficiency in conducting electrical measurements and studying machine characteristics for practical applications.
3. Demonstrate skills in measuring power parameters and calculate energy consumption for residential applications.
4. Analyze the characteristics of semiconductor devices
5. Find the frequency response of amplifiers using BJT
6. Verify the truth tables of logic gates and basic flip flops

CO–PO Mapping

COs	PO4	PO5	PO6	PO9	PO12
CO1	3	2	1	1	1
CO2	3	2	1	1	1
CO3	3	2	1	1	1
CO4	3	2	1	1	1
CO5	3	2	1	1	1
CO6	3	2	1	1	1

3–Strongly linked | 2–Moderately linked | 1–Weakly linked

Activities:

1. Familiarization of commonly used Electrical & Electronic Workshop Tools: Bread board, Solder, cables, relays, switches, connectors, fuses, Cutter, plier, screwdriver set, wire stripper, flux, knife/blade, soldering iron, de-soldering pump etc.
   - Provide some exercises so that hardware tools and instruments are learned to be used by the students.
2. Familiarization of Measuring Instruments like Voltmeters, Ammeters, multimeter, LCR-Q meter, Power Supplies, CRO, DSO, Function Generator, Frequency counter.
   - Provide some exercises so that measuring instruments are learned to be used by the students.
3. Components:
   - Familiarization/Identification of components (Resistors, Capacitors, Inductors, Diodes, transistors, IC's etc.) – Functionality, type, size, colour coding package, symbol, cost etc.
   - Testing of components like Resistor, Capacitor, Diode, Transistor, ICs etc. - Compare values of components like resistors, inductors, capacitors etc with the measured values by using instruments

PART A: ELECTRICAL ENGINEERING LAB
List of experiments:

1. Verification of KCL and KVL
2. Verification of Superposition theorem
3. Measurement of Resistance using Wheat stone bridge
4. Magnetization Characteristics of DC shunt Generator
5. Measurement of Power and Power factor using Single-phase wattmeter
6. Measurement of Earth Resistance using Megger
7. Calculation of Electrical Energy for Domestic Premises **Note:** Minimum Six Experiments to be performed.

PART B: ELECTRONICS ENGINEERING LAB List of Experiments:

1. Plot V-I characteristics of PN Junction diode A) Forward bias B) Reverse bias.
2. Plot V – I characteristics of Zener Diode and its application as voltage Regulator.
3. Implementation of half wave and full wave rectifiers Plot Input & Output characteristics of BJT in CE and CB configurations
4. Frequency response of CE amplifier.

5. Simulation of RC coupled amplifier with the design supplied
6. Verification of Truth Table of AND, OR, NOT, NAND, NOR, Ex-OR, Ex-NOR gates using ICs.
7. Verification of Truth Tables of S-R, J-K& D flip flops using respective ICs. Tools / Equipment Required: DC Power supplies, Multi meters, DC Ammeters, DC Voltmeters, AC Voltmeters, CROs, all the required active devices.

List of Augmented Experiments.

1. Connections of Tube Light wiring
2. Connections of Godown Wiring
3. Connections of stair case wiring
4. Generate fixed positive 5V using IC7405
5. Generate fixed Negative 5V using IC7905
6. Generate sinusoidal wave form using function generator

Reference Books:

1. R. L. Boylestad & Louis Nashlesky, Electronic Devices & Circuit Theory, PearsonEducation, 2021.
2. R. P. Jain, Modern Digital Electronics, 4th Edition, Tata Mc Graw Hill, 2009
3. R. T. Paynter, Introductory Electronic Devices & Circuits – Conventional Flow Version, Pearson Education,2009.
4. Basic Electrical Engineering, D. C. Kulshreshtha, Tata McGraw Hill, 2019, First Edition
5. Power System Engineering, P.V. Gupta, M.L. Soni, U.S. Bhatnagar and A. Chakrabarti,Dhanpat Rai & Co, 2013
6. Fundamentals of Electrical Engineering, Rajendra Prasad, PHI publishers, 2014, Third Edition Note: Minimum Six Experiments to be performed. All the experiments shall be implemented using both Hardware and Software.

23BEX06 - ENGINEERING WORKSHOP
(Common to all branches of Engineering)

0 0 3 1.5

Course Outcomes:
At the end of this course a student will be able to

1. Demonstrate the simple wooden components like Cross Lap joint, T-Lap joint, Dovetail Joint.
2. Develop the simple house hold items like Taper Tray, Square box, Open Scoop using sheet metal.
3. Build the V- Fit, Square fit, Dovetail fit using mild steel.
4. Understand simple house wiring circuits like Parallel/Series connection of three bulbs, Stair Case Wiring, Godown Wiring.
5. Create the Green Sand Mould for given the patterns like rectangular shape, circular shape.
6. Construct the metal joint using Arc Welding like: Lap joint, Butt joint.

COs – POs Mapping:

COs	PO_1	PO_9	PO_{12}
1	3	3	2
2	3	3	2
3	3	3	2
4	3	3	2
5	3	3	2
6	3	3	2

3–Strongly linked | 2–Moderately linked | 1–Weakly linked

Demonstration: Safety practices and precautions to be observed in workshop.
Wood Working: Familiarity with different types of woods and tools used in wood working and make following joints: a) Cross Lap joint, b) T-Lap joint, c) Dovetail Joint.
Sheet Metal Working: Familiarity with different types of tools used in sheet metal working, Developments of following sheet metal job from GI sheets: a) Taper Tray, b) Square box, c) Open Scoop.
Fitting: Familiarity with different types of tools used in fitting and do the following fitting exercises: a) V- Fit, b) Dovetail fit, c) Half Round Fit.
Electrical Wiring: Familiarity with different types of basic electrical circuits and make the following connections: a) Parallel/Series connection of three bulbs, b) Stair Case Wiring, c) Godown Wiring **Foundry:** Demonstration of Moulding tools and processes, Preparation of Green Sand Moulds for given Patterns: a) rectangular shape mould, b) circular shape mould
Welding Shop: Demonstration and practice on Arc Welding. Preparation of a) Lap joint and b) Butt joint.

LIST OF EXPERIMENTS:

Wood Working:

1. Cross Lap joint,
2. T-Lap joint,
3. Dovetail Joint **Sheet Metal Working**:
4. Taper Tray,
5. Square box,
6. Open Scoop

Fitting:

1. V- Fit,
2. Square fit,
3. Dovetail fit, **Electrical Wiring**:
4. Parallel/Series connection of three bulbs,
5. Stair Case Wiring,
6. Godown Wiring

Foundry Trade:

1. Mould cavity for rectangular shape
2. Mould cavity for a straight pipe **Welding Shop**:
3. Lap joint

4. Butt joint.

 # Any two jobs from each trade must be performed by the student.

AUGMENTED EXPERIMENT / MINI PROJECT: An innovative and creative useful house hold product/model should be prepared by the group of 6-10 students using the knowledge gathered from the all shops in workshop.

TEXTBOOKS:

1. Basic Workshop Technology: Manufacturing Process, Felix W.; Independently Published,2019. Workshop Processes, Practices and Materials; Bruce J. Black, Routledge publishers, 5th Edn. 2015.
2. A Course in Workshop Technology Vol I. & II, B.S. Raghuwanshi, Dhanpath Rai & Co., 2015 & 2017.

REFERENCE BOOKS:

1. Elements of Workshop Technology, Vol. I by S. K. Hajra Choudhury & Others, Media Promoters and Publishers, Mumbai. 2007, 14th edition
2. Workshop Practice by H. S. Bawa, Tata-McGraw Hill, 2004.
3. Wiring Estimating, Costing and Contracting; Soni P.M. & Upadhyay P.A.; Atul Prakashan, 2021-22.

23BEX07 - COMPUTER PROGRAMMING LAB
(Common to all branches of Engineering)

0 0 3 1.5

Course Outcomes

1. Implement, execute the programs in C language for solving a problem
2. Exercise conditional and iterative statements to Write C programs
3. Implement programs to develop applications using functions
4. Apply Arrays and structures to solve real world problems
5. Make use of pointers to design applications with efficient use of memory
6. Solve problems using files concept

COs – POs Mapping

CO's	PO1	PO2	PO3	PO4	PO5	PO6	PO7	PO8	PO9	PO10	PO11	PO12	PSO1	PSO2
CO1	3	3	2	3	3				3		2	2		
CO2	3	2	2	2	2				2		2	2		
CO3	3	2	2	3	3				3		2	2		
CO4	3	3	2	3	3				3		2	2		
CO5	3	3	2	2	2				2		2	2		
CO6	3	3	2	3	3				3		2	2		

3–Strongly linked | 2–Moderately linked | 1–Weakly linked

List of Experiments:

UNIT-I

WEEK 1:

Objective: Getting familiar with the programming environment on the computer and writing the first program.
Suggested Experiments/Activities:
Tutorial 1: Problem-solving using Computers.
Lab1: Familiarization with the programming environment
i) Basic Linux environment and its editors like Vi, Vim &Emacs etc. ii)
Exposure to Turbo C, gcc iii) Writing simple programs using printf(), scanf()

WEEK 2:

Objective: Getting familiar with how to formally describe a solution to a problem in a seriesof finite steps using textual and graphic notation.
Suggested Experiments /Activities:
Tutorial 2: Problem-solving using Algorithms and Flow charts.
Lab 1: Converting algorithms/flow charts into C Source code.
Developing the algorithms/flowcharts for the following sample programs i) Sum and
average of 3 numbers ii) Conversion of Fahrenheit to Celsius and vice versa iii)
Simple interest calculation

WEEK 3:

Objective: Learn how to define variables with the desired data-type, initialize them with appropriate values and how arithmetic operators can be used with variables and constants.
Tutorial 3: Variable types and type conversions:
Lab 3: Simple computational problems using arithmetic expressions. i) Finding
the square root of a given number ii) Finding compound interest
iii) Area of a triangle using Heron's formulae iv) Distance
traveled by an object

UNIT-II

WEEK4

Objective: Explore the full scope of expressions, type-compatibility of variables & constants and operators used in the expression, and how operator precedence works.
Suggested Experiments/Activities:
Tutorial4: Operators and the precedence and as associativity:
Lab4: Simple computational problems using the operator's precedence and associativity i) Evaluate the following expressions.

a. A+B*C+(D*E) + F*G

b. A/B*C-B+A*D/3
c. c. A+++B---A
d. d. J= (i++) + (++i)

ii) Find the maximum of three numbers using the conditional operator iii) Take marks of 5 subjects in integers, and find the total, average in float

WEEK 5:

Objective: Explore the full scope of different variants of —if construct||, namely if-else, null-- else, if-else if*-else, switch, and nested-if, including in what scenario each can be used and how to use them. Explore all relational and logical operatorswhile writing conditionals for —if construct||.

Suggested Experiments/Activities:

Tutorial 5: Branching and logical expressions: Lab 5: Problems involving if-then-else structures.

i) Write a C program to find the max and min of four numbers using if-else.
ii) Write a C program to generate electricity bill. iii) Find the roots of the quadratic equation. iv) Write a C program to simulate a calculator using a switch case.

v) Write a C program to find whether the given year is a leap year.

WEEK 6:

Objective: Explore the full scope of iterative constructs, namely while loop, do-while loop, and for loop in addition to structured jump constructs like break and continue, including when eachof these statements is more appropriate. Suggested Experiments/Activities:

Tutorial 6: Loops, while and for loops

Lab 6: Iterative problems, e.g., the sum of series

i) Find the factorial of a given number using any loop. ii) Find whether the given number is a prime or not. iii) Compute sine and cos series iv) Checking whether a number is palindrome

v) Construct a pyramid of numbers.

UNIT-III

WEEK7:

Objective: Explore the full scope of the Arrays construct, namely defining and initializing 1-D and 2-D and, More generically, n-D arrays and referencing individual array elements from the defined array. Using integer 1-D arrays,explore search solution linear search.

Suggested Experiments/Activities:

Tutorial 7: 1 D Arrays: searching. Lab 7:1D Array manipulation, linear search

i) Find the min and max of a 1-D integer array.
ii) Perform linear search on the 1D array.
iii) The reverse of a 1D integer array iv) Find 2's complement of the given binary number. v) Eliminate duplicate elements in an array.

WEEK 8:

Objective: Explore the difference between other arrays and character arrays that can be used as Strings by using null characters and get comfortable with strings by doing experiments that will reverse a string and concatenate two strings. Explore sorting solution bubble sort using integer arrays.

Suggested Experiments/Activities:

Tutorial 8: 2 D arrays, sorting and Strings.

Lab 8: Matrix problems, String operations, Bubble sort i) Addition of two matrices ii) Multiplication two matrices iii) Sort array elements using bubble sort iv) Concatenate two strings without built-in functions

v) Reverse a string using built-in and without built-in string functions

UNIT-IV

WEEK9:

Objective: Explore pointers to manage a dynamic array of integers, including memory allocation value initialization,resizing, changing, and reordering the contents of an array, and memory deallocation using malloc (), calloc (),realloc () and free () functions. Gain experience processing command-line arguments received by C Suggested Experiments/Activities:

Tutorial 9: Pointers, structures, and dynamic memory allocation Lab 9: Pointers and structures, memory dereference.

i) Write a C program to find the sum of a 1D array using malloc() ii) Write a C program to find the total average of n students using structures iii) Enter n students data using calloc() and display failed students list iv) Read student name and marks from the command line and display the student details along with the total.
v) Write a C program to implement realloc()

WEEK 10:

Objective: Experiment with C Structures, Unions, bit fields self-referential structures(Singlylinked lists), and nested structures Suggested Experiments/Activities:
Tutorial 10: Bitfields, Self-Referential Structures, Linked lists
Lab10: Bitfields
Read and print a date using dd/mm/yyyy format using bit-fields and differentiate the same without using bitfields
i) Create and display a singly linked list using self-referential structure.
ii) Demonstrate the differences between structures and unions using a C program. iii) Write a C program to shift/rotate using bitfields. iv) Write a C program to copy one structure variable to another structure of the same type.

UNIT-V

WEEK 11:

Objective: Explore the Functions, sub-routines, scope and extent of variables, doing some experiments by Parameter passing using call by value. Basic methods of numerical integration Suggested Experiments/Activities:
Tutorial 11: Functions, call by value, scope and extent,
Lab 11: Simple functions using call by value, solving differential equations using Eulers theorem.

i) Write a C function to calculate NCR value.
ii) Write a C function to find the length of a string.
iii) Write a C function to transpose of a matrix. iv) Write a C function to demonstrate numerical integration of differential equations using Euler's method

WEEK 12:

Objective: Explore how recursive solutions can be programmed by writing recursive functions that can be invoked from the main by programming at-least five distinct problems that have naturally recursive solutions.
Suggested Experiments/Activities:
Tutorial 12: Recursion, the structure of recursive calls
Lab 12: Recursive functions
i) Write a recursive function to generate Fibonacci series. ii) Write a recursive function to find the lcm of two numbers. iii) Write a recursive function to find the factorial of a number. iv) Write a C Program to implement Ackermann function using recursion. v) Write a recursive function to find the sum of series.

WEEK 13:

Objective: Explore the basic difference between normal and pointer variables, Arithmetic operations using pointers and passing variables to functions using pointers Suggested Experiments/Activities:
Tutorial 13: Call by reference, dangling pointers
Lab 13: Simple functions using Call by reference, Dangling pointers. i) Write a C program to swap two numbers using call by reference.
ii) Demonstrate Dangling pointer problem using a C program. iii) Write a C program to copy one string into another using pointer. iv) Write a C program to find no of lowercase, uppercase, digits and other characters using pointers.

WEEK14:

Objective: To understand data files and file handling with various file I/O functions.Explore the differences Between text and binary files.
Suggested Experiments/Activities:
Tutorial 14: File handling
Lab 14: File operations

i) Write a C program to write and read text into a file. ii) Write a C program to write and read text into a binary file using fread() and fwrite() iii) Copy the contents of one file to another file. iv) Write a C program to merge two files into the third file using command-line arguments. v) Find no. of lines, words and characters in a file

List of Augmented Experiments:

1. Employee'sManagement System
2. Librarymanagement system

3. Automationofdepartment store
4. PersonalDairy Management
5. TelecomBilling Management
6. BankManagement System
7. Contacts Management

Text books:

1. Ajay Mittal, Programming in C: A practical approach, 1 st Edition, Pearson.
2. Byron Gottfried, Schaum' s Outline of Programming with C, 4th Edition, 2020, McGraw Hill.

Reference Books:

1. Brian W. Kernighan and Dennis M. Ritchie, The C Programming Language, Prentice- Hall of India. C Programming,
2. A Problem-Solving Approach, Forouzan, Gilberg, Prasad,3rdEdn, CENGAGE.

23BEX08 - IT WORKSHOP
(Common to all branches of Engineering)

0 0 2 1

Course Outcomes:

At the end of the Course, Student will be able to:

1. Demonstrate the process of Assembling and disassembling the PC.
2. Illustrate the steps involved in installations of various operating systems.
3. Understand the process of Configuring IP address and perform virus free downloads.
4. Create projects using Latex/ Word and organize data and spreadsheets.
5. Design basic and interactive Power Point Presentations.
6. Improve Conversational abilities using AI-Tools.

COs – POs Mapping

COs	PO_1	PO_2	PO_3	PO_4	PO_9	PO_{12}
1	3	2	3	2	3	3
2	2	3	2	3	3	2
3	3	2	2	2	3	2
4	2	3	2	2	3	2
5	3	3	3	2	3	2
6	2	2	2	2	3	2

3 - Strongly Linked | 2 – Moderately Linked | 1 – Weakly Linked

PC Hardware

Task 1: Identify the peripherals of a computer, components in a CPU and its functions. Draw the block diagram of the CPU along with the configuration of each peripheral and submit to your instructor. **Task 2:** Every student should disassemble and assemble the PC back to working condition. Lab instructors should verify the work and follow it up with a Viva. Also, students need to go through the video which shows the process of assembling a PC. A video would be given as part of the course content.

Task 3: Every student should individually install MS windows on the personal computer. Lab instructor should verify the installation and follow it up with a Viva.

Task 4: Every student should install Linux on the computer. This computer should have windows installed. The system should be configured as dual boot with both Windows and Linux. Lab instructors should verify the installation and follow it up with a Viva

Internet & World Wide Web

Task1: Orientation & Connectivity Boot Camp: Students should get connected to their Local Area Network and access the Internet. In the process they configure the TCP/IP setting. Finally, students should demonstrate, to the instructor, how to access the websites and email. If there are no internet connectivity preparations need to be made by the instructors to simulate the WWW on the LAN. **Task 2:** Web Browsers, Surfing the Web: Students customize their web browsers with the LAN proxy settings, bookmarks, search toolbars and pop-up blockers. Also, plug-ins like Macromedia Flash and JRE for applets should be configured.

Task 3: Search Engines & Netiquette: Students should know what search engines are and how to use the search engines. A few topics would be given to the students for which they need to search on Google. This should be demonstrated to the instructors by the student.

Task 4: Cyber Hygiene: Students would be exposed to the various threats on the internet and would be asked to configure their computer to be safe on the internet. They need to customize their browsers to block pop ups, block active x downloads to avoid viruses and/or worms.

LaTeX and WORD

Task 1 – Word Orientation: The mentor needs to give an overview of LaTeX and Microsoft (MS) office or equivalent (FOSS) tool word: Importance of LaTeX and MS office or equivalent (FOSS) tool Word as word Processors, Details of the four tasks and features that would be covered in each, Using LaTeXand word – Accessing, overview of toolbars, saving files, Using help and resources, rulers, format painter in word.

Task 2: Using LaTeX and Word to create a project certificate. Features to be covered: - Formatting Fonts in word, Drop Cap in word, Applying Text effects, Using Character Spacing, Borders and Colours, Inserting Header and Footer, Using Date and Time option in both LaTeX and Word.

Task 3: Creating project abstract Features to be covered: -Formatting Styles, inserting table, Bullets and Numbering, Changing Text Direction, Cell alignment, Footnote, Hyperlink, Symbols, Spell Check, Track Changes.
Task 4: Creating a Newsletter: Features to be covered: - Table of Content, Newspaper columns, Images from files and clipart, Drawing toolbar and Word Art, Formatting Images, Textboxes, Paragraphs and Mail Merge in word.

EXCEL
Excel Orientation: The mentor needs to tell the importance of MS office or equivalent (FOSS) tool Excel as a Spreadsheet tool, give the details of the four tasks and features that would be covered in each. Using Excel – Accessing, overview of toolbars, saving excel files, Using help and resources. **Task 1:** Creating a Scheduler - Features to be covered: Gridlines, Format Cells, Summation, auto fill, Formatting Text
Task 2: Calculating GPA -Features to be covered:- Cell Referencing, Formulae in excel – average, std. deviation, Charts, Renaming and Inserting worksheets, Hyper linking, Count function.

LOOKUP/VLOOKUP
Task 3: Split cells, freeze panes, group and outline, Sorting, Boolean and logical operators, Conditional formatting

POWERPOINT
Task 1: Students will be working on basic power point utilities and tools which help them create basic power point presentations. PPT Orientation, Slide Layouts, Inserting Text, Word Art, Formatting Text, Bullets and Numbering, Auto Shapes, Lines and Arrows in PowerPoint.
Task 2: Interactive presentations - Hyperlinks, Inserting –Images, Clip Art, Audio, Video, Objects, Tables and Charts.
Task 3: Master Layouts (slide, template, and notes), Types of views (basic, presentation, slide slotter, notes etc), and Inserting – Background, textures, Design Templates, Hidden slides.

AI TOOLS – ChatGPT
Task 1: Prompt Engineering: Experiment with different types of prompts to see how the model responds. Try asking questions, starting conversations, or even providing incomplete sentences to see how the model completes them.
Ex: Prompt: "You are a knowledgeable AI. Please answer the following question: What is the capital of France?"
Task 2: Creative Writing: Use the model as a writing assistant. Provide the beginning of a story or a description of a scene, and let the model generate the rest of the content. This can be a fun way to brainstorm creative ideas
Ex: Prompt: "In a world where gravity suddenly stopped working, people started floating upwards. Write a story about how society adapted to this new reality."
Task 3: Language Translation: Experiment with translation tasks by providing a sentence in one language and asking the model to translate it into another language. Compare the output to see how accurate and fluent the translations are.
Ex:Prompt: "Translate the following English sentence to French: 'Hello, how are you doing today?'"

Reference Books:

1. Comdex Information Technology course tool kit Vikas Gupta, WILEY Dream tech
2. The Complete Computer upgrade and repair book, 3rd edition Cheryl A Schmidt, WILEY Dream tech
3. Introduction to Information Technology, ITL Education Solutions limited, Pearson Education. 4. PC Hardware - A Handbook – Kate J. Chase PHI (Microsoft)
5. LaTeX Companion – Leslie Lamport, PHI/Pearson.
6. IT Essentials PC Hardware and Software Companion Guide Third Edition by David Anfins on and Ken Quamme. – CISCO Press, Pearson Education.
7. IT Essentials PC Hardware and Software Labs and Study Guide Third Edition by PatrickRegan– CISCO Press, Pearson Education.

23HSX02 - COMMUNICATIVE ENGLISH LAB
(Common to all branches of Engineering)

0 0 2 1

Course Outcomes

1. Make use of the acquired knowledge of English sound system
2. Improve articulation of sounds using the patterns of accent, rhythm and intonation
3. Develop the skills of communication in formal and informal situations
4. Choose and play different roles and practice interpersonal communication
5. Organize ideas in a structured manner in public speaking activities
6. Demonstrate the necessary verbal and non-verbal communication in technical presentations

COs – POs Mapping

CO's	PO1	PO2	PO3	PO4	PO5	PO6	PO7	PO8	PO9	PO10	PO11	PO12	PSO1	PSO2
CO1	1			3	3				3	3	1	2		
CO2	1			3	3				3	3	2	2		
CO3	1			3	3				3	3	2	1		
CO4	1			3	3				3	3	2	2		
CO5	1			3	3				3	3	1	1		
CO6	1			3	3				3	3	1	1		

3–Strongly linked | 2–Moderately linked| 1–Weakly linked

List of Experiments

1. Letters and Sounds of English
2. Role play/ Conversation Practice-1
3. Jam
4. E-Mail Writing
5. Prounciation Rules
6. Role play/ Conversation Practice-II
7. Accent rules and Intonation
8. Presentation Skills
9. Resume Writing
10. Debating
11. Group Discussion
12. Interviews
13. Poster Presentation
14. Statement of Purpose
15. Role play/ Conversation Practice-3 16. Role play/ Conversation Practice-4

Augmented Experiment

List of Augmented Experiments[2]

1. Common Errors in English
2. Listening Skills
3. Writing Skills
4. Reading Skills
5. Public Speaking
6. Interview Skills
7. Business Communication

---

8. Functional English
9. Preparation for GRE/TOEFL
10. Preparation for IELTS/CAT/GMAT

[1]Students shall opt any one of the Augmented Experiments in addition to the regular experiments

Reading Material (s)

Reference Books:

1. Raman Meenakshi, Sangeeta-Sharma. Technical Communication. Oxford Press.2018.
2. Taylor Grant: English Conversation Practice, Tata McGraw-Hill Education India, 2016
3. Hewing's, Martin. Cambridge Academic English (B2). CUP, 2012.
4. J. Sethi& P.V. Dhamija. A Course in Phonetics and Spoken English, (2nd Ed), Kindle, 2013
5. K. Nirupa Rani, Jayashree Mohan Raj, B. Indira, (Ed) Speak Well (C.D) Orient Black Swan Pvt Ltd, Hyderabad, 2012

Web Resources:

Spoken English:

1. www.esl-lab.com
2. www.englishmedialab.com
3. www.englishinteractive.net
4. https://www.britishcouncil.in/english/online
5. http://www.letstalkpodcast.com/
6. https://www.youtube.com/c/mmmEnglish_Emma/featured
7. https://www.youtube.com/c/ArnelsEverydayEnglish/featured
8. https://www.youtube.com/c/engvidAdam/featured
9. https://www.youtube.com/c/EnglishClass101/featured
10. https://www.youtube.com/c/SpeakEnglishWithTiffani/playlists
11. https://www.youtube.com/channel/UCV1h_cBE0Drdx19qkTM0WNw

Voice & Accent:

1. https://www.youtube.com/user/letstalkaccent/videos
2. https://www.youtube.com/c/EngLanguageClub/featured
3. https://www.youtube.com/channel/UC_OskgZBoS4dAnVUgJVexc
4. https://www.youtube.com/channel/UCNfm92h83W2i2ijc5Xwp_IA

23HSX11 - HEALTH AND WELLNESS, YOGA AND SPORTS
(Common to All branches of Engineering)

0 0 1 0.5

Course Objectives:
The main objective of introducing this course is to make the students maintain their mental and physical wellness by balancing emotions in their life. It mainly enhances the essential traits required for the development of the personality.

Course Outcomes: After completion of the course the student will be able to
CO1: Understand the importance of yoga and sports for Physical fitness and sound health.
CO2: Demonstrate an understanding of health-related fitness components.
CO3: Compare and contrast various activities that help enhance their health.
CO4: Assess current personal fitness levels.**CO5:** Develop Positive Personality

UNIT I
Concept of health and fitness, Nutrition and Balanced diet, basic concept of immunity Relationship between diet and fitness, Globalization and its impact on health, Body Mass Index (BMI) of all age groups.
Activities:
i) Organizing health awareness programmes in community ii) Preparation of health profile
iii) Preparation of chart for balance diet for all age groups

UNIT II
Concept of yoga, need for and importance of yoga, origin and history of yoga in Indian context, classification of yoga, Physiological effects of Asanas- Pranayama and meditation, stress management and yoga, Mental health and yoga practice.
Activities:
Yoga practices – Asana, Kriya, Mudra, Bandha, Dhyana, Surya Namaskar

UNIT III
Concept of Sports and fitness, importance, fitness components, history of sports, Ancient and Modern Olympics, Asian games and Commonwealth games.
Activities:
i) Participation in one major game and one individual sport viz., Athletics, Volleyball, Basketball, Handball, Football, Badminton, Kabaddi, Kho-kho, Table tennis, Cricket etc.
Practicing general and specific warm up, aerobics ii) Practicing cardiorespiratory fitness, treadmill, run test, 9 min walk, skipping andrunning.

Reference Books:

1. Gordon Edlin, Eric Golanty. Health and Wellness, 14th Edn. Jones & Bartlett Learning,2022
2. T.K.V.Desikachar. The Heart of Yoga: Developing a Personal Practice
3. Archie J.Bahm. Yoga Sutras of Patanjali, Jain Publishing Company, 1993
4. Wiseman, John Lofty, SAS Survival Handbook: The Ultimate Guide to Surviving Anywhere Third Edition, William Morrow Paperbacks, 2014
5. The Sports Rules Book/ Human Kinetics with Thomas Hanlon. -- 3rd ed. Human Kinetics, Inc.2014

General Guidelines:
1. Institutes must assign slots in the Timetable for the activities of Health/Sports/Yoga.
2. Institutes must provide field/facility and offer the minimum of five choices of as many as Games/Sports.
3. Institutes are required to provide sports instructor / yoga teacher to mentor the students.

Evaluation Guidelines:
1. Evaluated for a total of 100 marks.
2. A student can select 6 activities of his/her choice with a minimum of 01 activity per unit. Each activity shall be evaluated by the concerned teacher for 15 marks, totalling to 90 marks.
3. A student shall be evaluated by the concerned teacher for 10 marks by conducting viva voce on the subject.

23HSX12 -NSS/NCC/SCOUTS & GUIDES/COMMUNITY SERVICE
(Common to All branches of Engineering)

0 0 1 0.5

Course Objectives:
The objective of introducing this course is to impart discipline, character, fraternity, teamwork, social consciousness among the students and engaging them in selfless service.

Course Outcomes: After completion of the course the students will be able to **CO1:** Understand the importance of discipline, character and service motto.
CO2: Solve some societal issues by applying acquired knowledge, facts, and techniques.
CO3: Explore human relationships by analyzing social problems.
CO4: Determine to extend their help for the fellow beings and downtrodden people. **CO5:** Develop leadership skills and civic responsibilities.

UNIT I Orientation
General Orientation on NSS/NCC/ Scouts & Guides/Community Service activities, career guidance.
Activities:

i) Conducting –ice breaking sessions-expectations from the course-knowing personal talents and skills
ii) Conducting orientations programs for the students –future plans-activitiesreleasing road map etc. iii) Displaying success stories-motivational biopics- award winning movies on societalissues etc.
iv) Conducting talent show in singing patriotic songs-paintings- any other contribution.

UNIT II Nature Care Activities:

i) Best out of waste competition.
ii) Poster and signs making competition to spread environmental awareness. iii) Recycling and environmental pollution article writing competition. iv) Organising Zero-waste day.
v) Digital Environmental awareness activity via various social media platforms.
vi) Virtual demonstration of different eco-friendly approaches for sustainable living.
vii) Write a summary on any book related to environmental issues.

UNIT III Community Service Activities:

i) Conducting One Day Special Camp in a village contacting village-area leaders- Survey in the village, identification of problems- helping them to solve via media- authorities-experts-etc.
ii) Conducting awareness programs on Health-related issues such as General Health, Mental health, Spiritual Health, HIV/AIDS, iii) Conducting consumer Awareness. Explaining various legal provisions etc. iv) Women Empowerment Programmes- Sexual Abuse, Adolescent Health and Population Education.
v) Any other programmes in collaboration with local charities, NGOs etc.

Reference Books:

1. Nirmalya Kumar Sinha & Surajit Majumder, *A Text Book of National Service Scheme* Vol;.I, Vidya Kutir Publication, 2021 (ISBN 978-81-952368-8-6)
2. *Red Book - National Cadet Corps* – Standing Instructions Vol I & II, Directorate General of NCC, Ministry of Defence, New Delhi
3. Davis M. L. and Cornwell D. A., —Introduction to Environmental Engineering||, McGraw Hill, New York 4/e 2008
4. Masters G. M., Joseph K. and Nagendran R. —Introduction to Environmental Engineering and Science||, Pearson Education, New Delhi. 2/e 2007
5. Ram Ahuja. *Social Problems in India*, Rawat Publications, New Delhi.

General Guidelines:

1. Institutes must assign slots in the Timetable for the activities.
2. Institutes are required to provide instructor to mentor the students.

Evaluation Guidelines:

1. Evaluated for a total of 100 marks.
2. A student can select 6 activities of his/her choice with a minimum of 01 activity per unit. Each activity shall be evaluated by the concerned teacher for 15 marks, totalling to 90 marks.
3. A student shall be evaluated by the concerned teacher for 10 marks by conducting viva voce on the subject.

23MAX02 DIFFERENTIAL EQUATIONS AND VECTOR CALCULUS
(Common to All Branches of Engineering) 3 0 0 3

Course Outcomes:

At the end of the course, the student will be able to

1. Model and solve the first order differential equations
2. Experiment with the practical importance of solving first and higher order differential equations in engineering.
3. Solve higher order differential equations and understand about initial value problems
4. Identify methods for solving linear partial differential equations.
5. Make use of central concepts in partial differential equations and vector differentiation
6. Apply vector calculus in the context of estimating the work done, circulation, flux and vector integral theorems

COs – POs Mapping

COs	PO1	PO2	PO12
1	3	2	1
2	3	2	1
3	3	2	1
4	3	2	1
5	3	2	1
6	3	2	1

3–Strongly linked | 2–Moderately linked | 1–Weakly linked

UNIT- I :

Differential equations of first order and first degree

Linear differential equations – Bernoulli's equations- Exact equations and equations reducible to exact form. Applications: Newton's Law of cooling – Law of natural growth and decay- Electrical circuits

UNIT – II :

Linear differential equations of higher order (Constant Coefficients)

Definitions, homogenous and non-homogenous, complimentary function, general particular integral, Wronskean, method of variation of parameters. Simultaneous linear equations, Applications to L-C-R Circuit problems and Simple Harmonic motion.

UNIT – III : Partial Differential Equations

Introduction and formation of Partial Differential Equations by elimination of arbitrary constants and arbitrary functions, solutions of first order linear equations using Lagrange's method. Homogeneous Linear Partial differential equations with constant coefficients.

UNIT - IV : Vector Calculus

Vector differentiation:

Scalar and vector point functions, vector operator del, del applies to scalar point functions-Gradient,del applied to vector point functions - Divergence and Curl, vector identities

Vector integration:

Line integral- circulation- work done, surface integral-flux, Green's theorem in the plane (without proof), Stoke's theorem (without proof), volume integral, Divergence theorem (without proof) and applications of these theorems.

Textbooks:

1. Erwin Kreyszig, Advanced Engineering Mathematics, 10/e,John Wiley & Sons, 2018.
2. B.S.Grewal,HigherEngineeringMathematics,44/e,Khanna publishers,2017.

Reference Books:

1. Dennis G.Zill and Warren S.Wright, Advanced Engineering Mathematics, Jones andBartlett, 2018.
2. Micheael Greenberg, Advanced Engineering Mathematics, 9th edition, Pearson edn
3. George B. Thomas, Maurice D. Weir and Joel Hass, Thomas Calculus, 14/e, PearsonPublishers, 2018.
4. R. K. Jain and S. R. K. Iyengar, Advanced Engineering Mathematics, 5/e, Alpha ScienceInternational Ltd., 2021 (9th reprint).
5. B.V. Ramana, Higher Engineering Mathematics, McGraw Hill Education, 2017

Internal Assessment Pattern

Cognitive Level	Int. Test 1 (%)	Int. Test 2 (%)	Lab Assessments
Remember	10	10	
Understand	60	60	40
Apply	30	30	60
Analyze			
Evaluate			
Create			
Total (%)	100	100	100

Sample Question (s)

Remember

1. State Newton's Law of Cooling
2. Find the Wronskian for the functions $cosx$ and $sinx$
3. Form the PDE by eliminating the arbitrary constants a and b from $z = ax + by + \frac{a}{b} - b$
4. State Gauss divergence theorem.

Understand

1. Solve $\left(1 + e^{x/y}\right)dx + e^{x/y}\left(1 - \frac{x}{y}\right)dy = 0$
2. Solve $\frac{d^2y}{dx^2} + 2\frac{dy}{dx} + y = 2e^{3x}$
3. Form the PDE by eliminating the arbitrary functions from $Z = f(x) + e^y g(x)$

Apply

1. A bacterial culture, growing exponentially, increases from 200 to 500 grams in the period from 6 a.m to 9 a.m. Find the number of grams which will be present at noon.
2. If a voltage of $20\cos 5t$ is applied to a series circuit consisting of 10 ohm resistor and 2 Henry inductor, determine the current at any time t.
3. Find the work done in moving a particle in the force field $F = 3x^2\bar{\imath} + (2xz - y)\bar{\jmath} + z\bar{k}$ along the straight line from (0,0,0) to (2,1,3).

23ME201 ENGINEERING MECHANICS
(Common to MECH & CIVIL)

3 0 0 3

Course Outcome:

1. Compute the resultant force in concurrent and coplanar force systems.
2. Analyze the equilibrium condition for different force systems with and without friction.
3. Determine the forces and their nature in the members of trusses.
4. Determine the centroids, centre of gravity and moment of inertia of different geometrical shapes.
5. Analyze the kinematics of rectilinear and curvilinear motions.
6. Assess the kinetics of rectilinear, curvilinear and rigid body motion.

CO-PO Mapping

COs	PO1	PO2	PO3	PSO_1
1	3	2	2	2
2	3	2	2	2
3	3	2	2	2
4	3	2	2	2
5	3	3	2	2
6	3	3	2	2

3–Strongly linked | 2–Moderately linked | 1–Weakly linked

UNIT I: Introduction to Engineering Mechanics – Basic Concepts, Scope and Applications, Systems of Forces: Coplanar Concurrent Forces– Components in Space–Resultant– Moment of Force and its Application –Couples and Resultant of Force Systems.
Friction: Introduction, limiting friction and impending motion, Coulomb's laws of dry friction, coefficient of friction, Cone of Static friction. **12 hours**

UNIT II: Equilibrium of Systems of Forces: Free Body Diagrams, Lami's Theorem, Equations of Equilibrium of Coplanar Systems, Graphical method for the equilibrium, Triangle law of forces, converse of the law of polygon of forces condition of equilibrium, Analysis of plane trusses by method of joints and sections. **12 hours**

UNIT III: Centroid and Centre of Gravity: Centroids of simple figures (from basic principles)–Centroids of Composite Figures. Centre of gravity of composite bodies,
Area Moments of Inertia: Definition– Polar Moment of Inertia, Parallel and perpendicular axis theorems, Moments of Inertia of Composite Figures. **12 hours**

UNIT IV: Rectilinear and Curvilinear motion of a particle: Kinematics and Kinetics –D'Alembert's Principle - Work Energy method and applications to particle motion-Impulse Momentum method.
Rigid body Motion: Kinematics and Kinetics of translation, Rotation about fixed axis and plane motion, Work Energy method and Impulse Momentum method. **12 hours**

Total: 48 hours

Textbooks:

1. S. Timoshenko, D. H. Young, J.V. Rao, S. Pati., Engineering Mechanics, 5th Edition, McGraw Hill Education.
2. Hibbeler R.C., Engineering Mechanics: Statics and Dynamics, 14th Edition, Pearson Education, Inc., New Delhi, 2022

Reference Books:

1. Engineering Mechanics, Statics and Dynamics, Rogers and M A. Nelson., McGraw Hill Education.
2. Engineering Mechanics, S.S Bhavikatti, 8th Edition, New Age International, 2022.
3. Engineering Mechanics, A.K Tayal, Statics and Dynamics, 14th Edition, Umesh Publishers, 2021
4. Engineering Mechanics: Principles of Statics and Dynamics, R.C. Hibbler., Pearson Press, 2006.
5. Introduction to Statics and Dynamics, Andy Ruina and Rudra Pratap., Oxford University Press, 2011.

Sample Questions(s)

Internal Assessment Pattern

Cognitive Level	Int. Test 1 (%)	Int. Test 2 (%)	Open Book Examinations (%)

Remember	15	15	-
Understand	30	30	-
Apply	55	55	70
Analyze	-	-	30
Evaluate	-	-	-
Create	-	-	-
Total (%)	100	100	100

Remember

1. Name different types of system of forces
2. Define centroid
3. Define area moment of inertia
4. State the laws of friction
5. List the assumptions of perfect frame
6. Define Rectilinear and Curvilinear motions

Understand

1. Explain Lami's theorem
2. Compare centroid and centre of gravity
3. Explain about area moment of inertia
4. How will you distinguish between static friction and dynamic friction?
5. Explain the difference between frame and truss
6. Explain the D Alembert's principle

Apply

1. Figure represents the concurrent force system acting at a joint of a bridge truss. Determine the value of P and E to maintain equilibrium of the forces

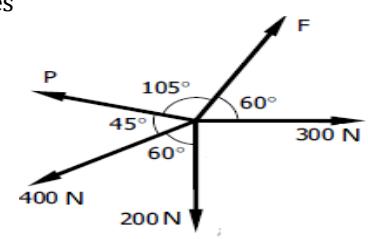

2. Identify the centroid of T-section shown in below Fig.

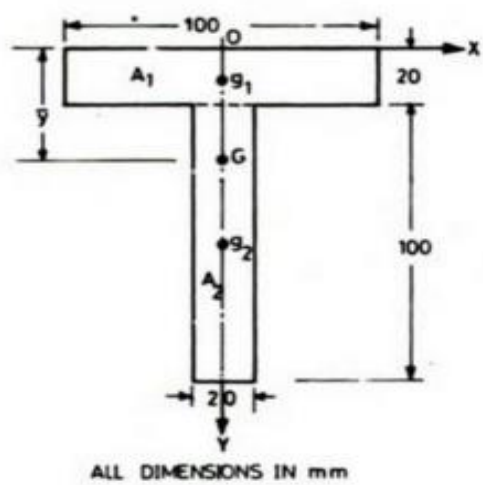

3. Determine the moment of inertia of the areas of Triangle bout its base by first principle
4. Determine the least value of force P to cause motion to impend rightwards. Assume the co-efficient of friction under the blocks to be 0.2 and pulley to be frictionless.

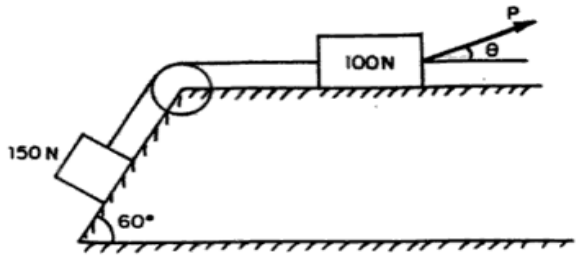

5. Determine the forces in all the members of the truss shown in Fig.

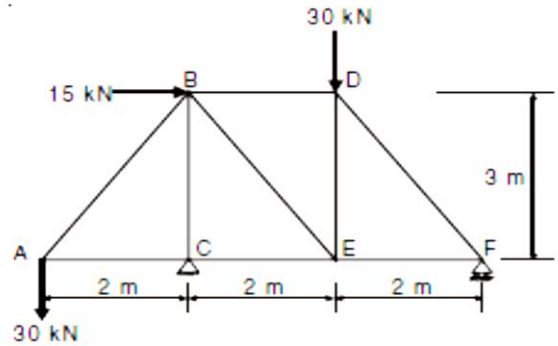

6. A stone is dropped into a well and the splash is heard two seconds later. If sound travels 335m/s, what is the depth of the well?

7. An 1800 kg Toyota Innova travels down the 10° inclined road at a speed of 6 m/s. If the driver jams on the brakes, causing his wheels to lock, solve how far the tires skid on the road using: a. Equation of the motion b. Principles of work-Energy The coefficient of kinetic friction between the wheels and the road is 0.5 **(For Open Book Examination and not for semester end examination)**

Analyze

1. A uniform ladder 3 m long weighs 200 N. It is placed against a wall making an angle of 60° with the floor as shown in Fig. The coefficient of friction between the wall and the ladder is 0.25 and that between the floor and ladder is 0.35. The ladder, in addition to its own weight, has to support a man of 1000 N at its top at B. Calculate: i) The horizontal force P to be applied to ladder at the floor level to prevent slipping. ii) If the force P is not applied, what should be the minimum inclination of the ladder with the horizontal, so that there is no slipping of it with the man at its top?
2. Compare the location of the centroids of an arc of circle and a sector of a circle subtending the same angle at the centre of the circle
3. A car A is travelling on a straight level road with a uniform speed of 60 km/hr. it is followed by another car B moving at a speed of 70 km/hr. when the distance between them is 2.5 km, the car B is decelerated at 20 km/hr^2. will the car be catch up with A? if not, why not? If yes, at what distance and time?
4. Analyze the ability of a hook (used by a crane) to raise prefabricated walls upright. The hook was approximately J-shaped, with a lip. The hook would grip one end of the wall and lift, while the other end of the wall remained in contact with the ground **(For Open Book Examination and not for semester end examination)**
6. The car A has a forward speed of 18 km/h and is accelerating at 3 m/s^2 Determine the velocity and acceleration of the car relative to observer B, who rides in a nonrotating chair on the Ferris wheel. The angular rate ω = 3 rev/min of the Ferris wheel is constant **(For Open Book Examination and not for semester end examination)**

(Common for CSE, CSE-AI&DS, CSE-AI&ML, IT)

23CS201 Data Structures

3 0 0 3

Course Outcomes

At the end of the course, Student will be able to

1. Explain the role of linear data structures in organizing and accessing data efficiently in algorithms.
2. Design, implement, and apply linked lists for dynamic data storage, demonstrating understanding of memory allocation.
3. Develop programs using stacks to handle recursive algorithms, manage program states, and solve related problems.
4. Apply queue-based algorithms for efficient task scheduling and breadth-first traversal in graphs and distinguish between deques and priority queues, and apply them appropriately to solve data management challenges.
5. Devise novel solutions to small scale programming challenges involving data structures such as stacks, queues, Trees
6. Recognize scenarios where hashing is advantageous, and design hash-based solutions for specific problems.

CO-PO Mapping

COs	PO1	PO2	PO3	PO12	PSO1
1	3	2	2	1	3
2	3	3	3	1	3
3	3	3	3	1	3
4	3	3	3	1	3
5	3	3	3	1	3
6	2	3	3	1	3

3–Strongly linked | 2–Moderately linked | 1–Weakly linked

Unit I

Introduction to Linear Data Structures: Definition and importance of linear data structures, Abstract data types (ADTs) and their implementation, Overview of time and space complexity analysis for linear data structures. **Searching Techniques**: Linear & Binary Search, **Sorting Techniques**: Bubble sort, Selection sort, Insertion Sort

11Hours

Unit II

Linked Lists and Stacks: Singly linked lists, representation and operations, doubly linked lists and circular linked lists, Comparing arrays and linked lists, Applications of linked lists. **Stacks**: Introduction to stacks: properties and operations, implementing stacks using arrays and linked lists, **13 Hours**

Unit III

Queues: Introduction to queues: properties and operations, implementing queues using arrays and linked lists. Deques: Introduction to deques (double-ended queues), Operations on deques and their applications**. Applications of Stack and Queue:** Applications of stacks in expression evaluation, backtracking, reversing list etc., Applications of queues in breadth-first search, scheduling, etc. **12 Hours**

Unit IV

Trees: Introduction to Trees, Binary Search Tree – Insertion, Deletion & Traversals Hashing: Brief introduction to hashing and hash functions, Collision resolution techniques: chaining and open addressing, Hash tables: basic implementation and operations, Applications of hashing in unique identifier generation, caching, etc.

12 Hours

Total: 48 Hours

Textbooks:

1. Data Structures and algorithm analysis in C, Mark Allen Weiss, Pearson, 2nd Edition.
2. Fundamentals of data structures in C, Ellis Horowitz, Sartaj Sahni, Susan Anderson-Freed, Silicon Press, 2008

Reference Books:

1. Algorithms and Data Structures: The Basic Toolbox by Kurt Mehlhorn and Peter Sanders
2. C Data Structures and Algorithms by Alfred V. Aho, Jeffrey D. Ullman, and John E. Hopcroft
3. Problem Solving with Algorithms and Data Structures" by Brad Miller and David Ranum
4. Introduction to Algorithms by Thomas H. Cormen, Charles E. Leiserson, Ronald L. Rivest, and Clifford Stein
5. Algorithms in C, Parts 1-5 (Bundle): Fundamentals, Data Structures, Sorting, Searching, and Graph Algorithms" by Robert Sedgewick

Internal Assessment Pattern

Cognitive Level	Int. Test 1 (%)	Int. Test 2 (%)	Lab Assessments
Remember	25	25	
Understand	38	38	
Apply	37	37	
Analyze	--		30
Evaluate	--		25
Create	--		45
Total (%)	100	100	100

Sample Question (s)

Remember

1. Compute the time complexity of insertion in a linked list.
2. Define Abstract Data Type (ADT)?
3. Define a linear data structure and give one example.

Understand

1. How does the implementation of ADTs benefit software development?
2. What is the time complexity of a linear search in the worst case?
3. Differentiate between stack and queue.

Apply

1. Describe the process of implementing an ADT for a stack.
2. Draw the logical structure of a doubly linked list.

23EE201 Electrical Circuit Analysis-1(For EEE Branch)

3 0 0 3

Course Outcomes

At the end of the course, Student will be able to

1. Summarize the V-I relations of electrical circuit elements.
2. Outline magnetic and couple circuits
3. Apply network reduction techniques to DC circuits
4. Summarize the behaviour of AC circuits
5. Apply network theorems to AC and DC circuits.
6. Outline the characteristics of series/parallel resonant circuits

COs – POs Mapping

COs	PO1	PO2	PO3	PO6	PO7	PO9	PO12	PSO1	PSO2
CO1	3	1	2	1	1	1	1	3	3
CO2	3	1	2	1	1	1	1	3	3
CO3	3	1	2	1	1	1	1	3	3
CO4	3	1	2	1	1	1	1	3	3
CO5	3	1	2	1	1	1	1	3	3
CO6	3	1	2	1	1	1	1	3	3

3–Strongly linked | 2–Moderately linked | 1–Weakly linked

UNIT-I: Introduction to Electrical Circuits

Basic circuit elements R, L, C and their V-I relations, dependent and independent sources, Kirchoff's laws, Network reduction techniques (series, parallel, series - parallel, star-to-delta and delta-to-star transformation, source transformation), nodal and mesh analysis to DC networks with dependent and independent voltage and current sources *supernode and supermesh analysis* **(12 Hours)**

UNIT-II: Magnetic Circuits

Terminology used in magnetic circuits, series, parallel and composite magnetic circuits, analogy between electrical and magnetic circuits, Faraday's laws of electromagnetic induction – concept of self and mutual inductance, Dot convention – coefficient of coupling.

Conductively coupled equivalent circuit **(10 Hours)**

UNIT-III: Single Phase Circuits

Characteristics of periodic functions, Average value, R.M.S. value, form factor, peak factor, and representation of a sine function, concept of phasor, phasor diagram.

Steady state analysis of R, L and C circuits to sinusoidal excitations-response of pure resistance, inductance, capacitance, series RL, RC and RLC circuits, parallel RL, RC and RLC parallel circuits, power and power factor

Resonance: Series Resonance-Characteristics of a series resonant circuit, Q-factor, selectivity and bandwidth, expression for half power frequencies; Parallel resonance- Q-factor, selectivity and bandwidth.

Locus diagram: RL, RC, RLC series circuits with R, L and C variables.

Comparison between series and parallel resonance, applications of resonant circuits **(15 Hours)**

UNIT-IV: Network theorems (DC & AC Excitations)

Superposition theorem, Thevenin's theorem, Norton's theorem, Maximum Power Transfer theorem, Reciprocity theorem an Millman's theorem and compensation theorem.

Tellegen's theorem **(11 Hours)**

(Total: 48 Hours)

Textbook (s)

1. W.H.Hayt, J.E.Kimmerly, and S.M.Durbin, "*Engineering Circuit Analysis*", Tata McGraw Hill, 8th Edition, 2015.
2. Charles K Alexander and Mathew N.O Sadiku, "*Fundamentals of Electric Circuits*", Tata McGraw Hill, 5th Edition, 2013.

3. M.E Van Valkenburg, "*Network Analysis*", Prentice Hall of India, 4th Edition, 2018.
4. P. Ramana, G.T.Chnadra Sekhar, G.Suresh, "*Network Theory*", SChand and Company Ltd., 1st Edition, 2024.

Reference (s)

1. Abhijit Chakrabarti, "*Circuit Theory Analysis and Synthesis*", Dhanpat Rai & Co., 6th Edition, 2014.
2. A Sudhakar, and Shyammohan S. Palli, "*Circuits and Networks: Analysis and Synthesis*", McGraw Hill Higher Education, 5th Edition, 2015.
3. M Nahvi, Joseph Edminister, K Uma Rao, "Electric Circuits, (Schaum's Outline Series)", McGraw Hill Higher Education, 7th Edition, 2017.

Internal Assessment Pattern

Cognitive Level	Int. Test 1 (%)	Int. Test 2 (%)	Assignment Test(%)
Remember	20	20	-
Understand	20	20	-
Apply	60	60	60
Analyze	-	-	40
Evaluate	-	-	-
Create	-	-	-
Total (%)	100	100	100

Sample Question (s)

Remember

1. When a 25 Ω resistor, 100 Ω resistor, 75Ω resistor and 50 Ω resistor are connected in parallel, then find the total resistance of the circuit.
2. Define statically induced emf.
3. List the limitations of Millman's theorem
4. State superposition theorem.
5. Define Quality factor and bandwidth.

Understand

1. Find the two elements in a series circuit, given that the current and total voltage are
$i = 10\cos(5000\,t - 23.13^0)\,A,\;\; v = 50\cos(5000\,t + 30^0)\,V$
2. When two coils are connected in series their effective inductance is found to be 10 H. When the connection of one coil is reversed, the effective inductance is 6 H. If the coefficient of coupling is 0.6, calculate the self inductance of each coil and the mutual inductance.
3. State dot rule for coupled coils and explain its significance.

Apply

1. For the circuit as shown in the figure, write the inductance matrix.

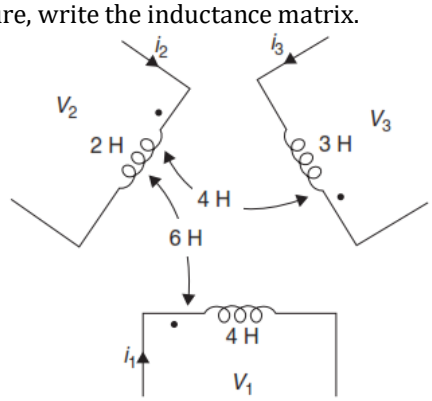

2. Find the power consumed by a load of $5\angle 60^0\,\Omega$ connected between terminals x and y in the circuit as shown in the figure, using Thevenin's theorem.

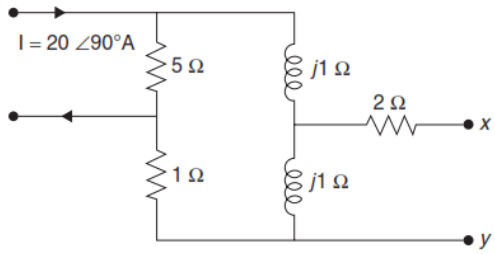

3. Determine the current in the 5 Ω resistor in the network shown in the figure.

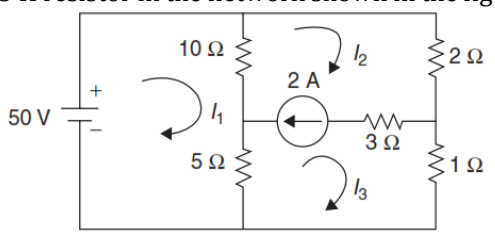

23EC201 Network Analysis (ECE Branch)

3 0 0 3

Course Outcomes

At the end of the course, Student will be able to

1. Apply network reduction techniques to DC circuits.
2. Apply network theorems to simplify complex networks.
3. Summarize the behavior of AC circuits.
4. Explain series and parallel connected coupled circuits.
5. Interpret various parameters for a given two-port network.
6. Illustrate the transient response of R, L, C circuits for DC and AC excitations.

COs – POs Mapping

COs	PO1	PO2	PO3	PO6	PO7	PO9	PO12	PSO1	PSO2
CO1	3	1	2	1	1	1	1	1	1
CO2	3	1	2	1	1	1	1	1	1
CO3	3	1	2	1	1	1	1	1	1
CO4	3	1	2	1	1	1	1	1	1
CO5	3	1	2	1	1	1	1	1	1
CO6	3	1	2	1	1	1	1	1	1

3–Strongly linked | 2–Moderately linked | 1–Weakly linked

UNIT-I

Introduction to Electrical Circuits and Network theorems

Introduction to Electrical Circuits: Types of circuit elements, types of sources, ohm's law, Kirchoff's laws, source transformation, star-delta conversion, mesh and nodal analysis, problem solving with resistances, principal of duality with examples.

Network Theorems: Superposition, Thevenin's, Norton's, Millman's, Reciprocity, Compensation, Substitution, Max Power Transfer, Tellegen's theorems.

13 Hours

UNIT-II

Steady state AC analysis and Resonance

Steady State AC Analysis: Impedance concept, j-operator, phasor notation, RL, RC, RLC circuits problem solving, calculation of different powers and power factor.

Resonance: Definition of resonance, series resonance, parallel resonance, bandwidth, quality factor of series and parallel resonance.

11 Hours

UNIT-III

Coupled Circuits and Two Port Networks

Coupled Circuits: Faraday's laws of electromagnetic induction, self-inductance, mutual inductance, coefficient of coupling, dot rule of coupled circuits, conductively coupled equivalent circuits- problem solving.

Two-port Networks: Z-parameters, Y-parameters, Transmission line parameters, h- parameters, Interrelationship between parameters, Interconnection of two port networks.

12 Hours

UNIT-IV

Transient Analysis

Transients: First order differential equations, Definition of time constants, RL circuit, RC circuit with DC excitation, evaluating initial conditions procedure, second order differential equations, problem-solving using RLC elements with DC excitation and AC excitation, Response of second order circuit as related to location of poles in s-plane.

Laplace transforms: introduction to Laplace transformation, problem solving using Laplace transform,

12 Hours

Total: 48 Hours

Textbook (s)

1. W.H.Hayt, J.E.Kimmerly, and S.M.Durbin, "*Engineering Circuit Analysis*", Tata McGraw Hill, 8th Edition, 2015.
2. Charles K Alexander and Mathew N.O Sadiku, "*Fundamentals of Electric Circuits*", Tata McGraw Hill, 5th Edition, 2013.
3. M.E Van Valkenburg, "*Network Analysis*", Prentice Hall of India, 4th Edition, 2018.
4. P. Ramana, G.T.Chnadra Sekhar, G.Suresh, "*Network Theory*", SChand and Company Ltd., 1st Edition, 2024.

Reference (s)

1. Abhijit Chakrabarti, "*Circuit Theory Analysis and Synthesis*", Dhanpat Rai & Co., 6th Edition, 2014.
2. A Sudhakar, and Shyammohan S. Palli, "*Circuits and Networks: Analysis and Synthesis*", McGraw Hill Higher Education, 5th Edition, 2015.
3. M Nahvi, Joseph Edminister, K Uma Rao, "Electric Circuits, (Schaum's Outline Series)", McGraw Hill Higher Education, 7th Edition, 2017.

Internal Assessment Pattern

Cognitive Level	Int. Test 1 (%)	Int. Test 2 (%)	Open Book/Assignment Exam(%)
Remember	10	10	
Understand	30	30	
Apply	60	60	70
Analyze			20
Evaluate			10
Create			
Total (%)	100	100	100

Sample Question (s)

Remember

1. Define Kirchhoff of current law
2. Define Thevenin Theorem
3. Define Superposition theorem
4. Define time constant of a RL circuit

Understand

1. Convert the below Star network to Delta network.

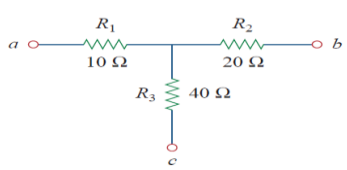

2. What is the Voltage across 8Ω resistor

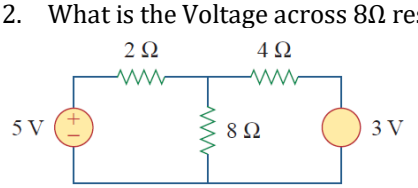

3. An incandescent lamp draws 2 A at 100 V. Find its resistance

Apply

1. Find the value of voltage across 2Ω resistor by using Thevenin's theorem.

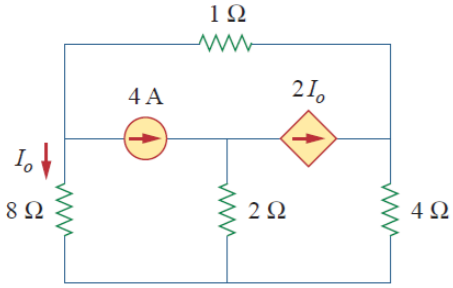

2. Find the Thevenin equivalent circuits at terminals ***a-b.***

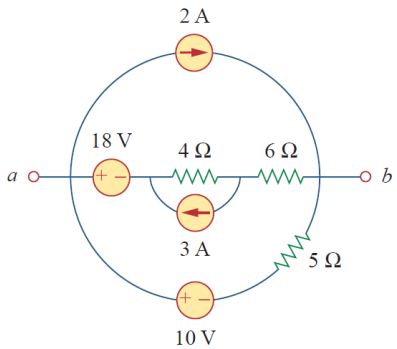

3. The switch in circuit has been in position *a* for a long time. At t=0, it moves to position *b*. Calculate $i(t)$ for all $t > 0$.

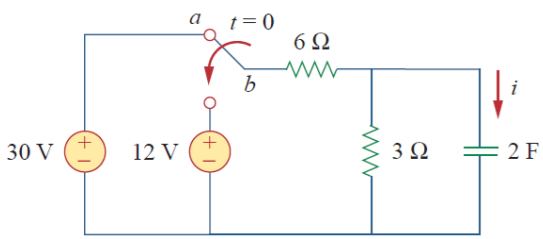

(Common for CSE, CSE-AI&DS, CSE-AI&ML, IT)

23CS202 Data Structures Lab

0 0 3 1.5

Course Outcomes

At the end of the course, Student will be able to

- Explain the role of linear data structures in organizing and accessing data efficiently in algorithms.
- Design, implement, and apply linked lists for dynamic data storage, demonstrating understanding of memory allocation.
- Develop programs using stacks to handle recursive algorithms, manage program states, and solve related problems.
- Apply queue-based algorithms for efficient task scheduling and breadth-first traversal in graphs and distinguish between deques and priority queues, and apply them appropriately to solve data management challenges.
- Devise novel solutions to small scale programming challenges involving data structures such as stacks, queues, Trees
- Recognize scenarios where hashing is advantageous, and design hash-based solutions for specific problems.

CO-PO Mapping

COs	PO2	PO3	PO4	PO12	PSO1
1	2	3	2	1	3
2	2	3	2	1	3
3	2	3	2	1	3
4	2	3	2	1	3
5	2	3	2	1	3
6	2	3	2	1	3

3–Strongly linked | 2–Moderately linked | 1–Weakly linked

List of Experiments:

1. Array Manipulation
    a. Write a program to reverse an array.
    b. Basic Array Programs
2. Searching Techniques
    a. C Programs to implement the Searching Techniques – Linear
    b. C Programs to implement the Searching Techniques - Binary Search
3. Sorting Techniques
    a. C Programs to implement Sorting Techniques – Bubble Sort
    b. C Programs to implement Sorting Techniques - Insertion Sort
4. Linked List Implementation
    a. Implement a singly linked list and perform insertion and deletion operations.
    b. Develop a program to reverse a linked list iteratively and recursively.
5. Linked List Applications
    a. Create a program to detect and remove duplicates from a linked list.
    b. Implement a linked list to represent polynomials and perform addition.
6. Double and Circular Linked List Implementation
    a. Implement a doubly linked list and perform various operations to understand its properties and applications.
    b. Implement a circular linked list and perform insertion, deletion, and traversal.
7. Stack Operations
    a. Implement a stack using arrays
    b. Implement a stack using linked lists
8. Queue Operations
    a. Implement a queue using arrays
    b. Implement a queue using linked lists
9. Queue Types
    a. Implement a circular queue
    b. Implement a double-ended queue (deque) with essential operations.
10. Stack Applications -I

    a. Use a stack to convert an infix expression to postfix
    b. Write a program to evaluate a postfix expression using a stack.
11. Stack Applications -II
    a. Implement a program to check for balanced parentheses using a stack.
    b. Create a program to determine whether a given string is a palindrome or not.
12. Queue Applications
    a. Develop a program to simulate a simple printer queue system.
    b. Implement a stack or queue to perform comparison and check for symmetry
13. Binary Search Tree
    a. Implementing a BST using Linked List.
    b. Traversing of BST.
14. Closed Hashing: Implement a hash table with open Addressing techniques.
15. Open Hashing: Implement a hash table with Separate chaining techniques.
16. Hashing- Application: Write a program to implement a simple cache using hashing.

Indicative list of applications-based experiments

1. **Integer to Roman**
   Problem Description: Given an integer, convert it to a Roman numeral. Input is guaranteed to be within the range from 1 to 3999.
   Implementation: You can create a function that iteratively subtracts the largest possible Roman numeral values from the given integer and appends the corresponding symbols until the integer becomes zero.
2. **Merge Two Sorted Linked Lists**
   Problem Description: Merge two sorted linked lists and return it as a new sorted list.
   Implementation: Create a function that takes two sorted linked lists as input and iteratively compares the nodes, merging them into a new sorted linked list.
3. **Task Scheduler**
   Problem Description: Given a character array representing tasks, each task is represented by a character. Tasks could be done without the original order. Each task is done in one unit of time. For each unit of time, any CPU can execute at most one task. Given the character array, find the minimum time required to finish all the tasks.
   Implementation: Implement a function that schedules the tasks efficiently based on their frequencies and calculates the minimum time required.
4. **Find the kth Smallest or Largest Element in a BST**
   Problem Description: Given a binary search tree, find the kth smallest or largest element in it.
   Implementation: Write a function that performs an in-order traversal of the BST while keeping track of the count of visited nodes. Return the kth element when the count matches k.
5. **Construct BST from Preorder or Postorder Traversal**
   Problem Description: Given an array representing either the preorder or postorder traversal of a binary search tree, construct the tree.
   Implementation: Create a function that recursively builds the binary search tree using the given traversal order.
6. **Binary Tree Level Order Traversal**
   Problem Description: Given a binary tree, return the level order traversal of its nodes' values. (i.e., from left to right, level by level).
   Implementation: Implement a function that performs a level order traversal using a queue to keep track of each level.
7. **Checking for Anagram Pairs using Hash Table**
   Problem Description: Given an array of strings, group anagrams together.
   Implementation: Create a function that uses a hash table to group anagrams. Anagrams will have the same sorted characters, which can be used as keys in the hash table.
8. **Check if the Tree is Balanced**
   Problem Description: Given a binary tree, determine if it is height-balanced.
   Implementation: Write a function that calculates the height of each subtree and checks if the difference in heights between left and right subtrees is within one.

23ME202 Engineering Mechanics lab - MECH

0 0 3 1.5

Course Outcomes:

1. Demonstrate knowledge of the principles governing the Law of forces and validate them through experimental setups
2. Execute the experiments to achieve equilibrium in coplanar-concurrent force system
3. Asses the significance of friction in mechanical systems.
4. Check the equilibrium of objects subjected to diverse forces, delve into rotational dynamics, and apply principles of conservation laws
5. Apply the principles of static equilibrium to analyse coplanar non-concurrent, parallel force systems
6. Apply the principle of mechanics to system of pulleys, compound pendulum and Bell-crank lever

COs – POs Mapping

CO	PO_1	PO_4	PO6	PO9	PO_{10}	PSO_1
1	3	2	2	3	2	2
2	3	2	2	3	2	2
3	3	2	2	3	2	2
4	3	2	2	3	2	2
5	3	2	2	3	2	2
6	3	2	2	3	2	2

Students have to perform any 10 of the following Experiments:

List of Experiments:

1. Verification of Law of Parallelogram of Forces.
2. Verification of Law of Triangle of Forces.
3. Verification of the Law of polygon for coplanar-concurrent forces acting on a particle in equilibrium and to find the value of unknown forces considering particle to be in equilibrium using universal force table.
4. Determination of coefficient of Static and Rolling Frictions
5. Determination of Centre of Gravity of different shaped Plane Lamina.
6. Verification of the conditions of equilibrium of a rigid body under the action of coplanar non- concurrent, parallel force system with the help of a simply supported beam.
7. Study of the systems of pulleys and draw the free body diagram of the system.
8. Determine the acceleration due to gravity using a compound pendulum.
9. Determine the Moment of Inertia of the compound pendulum about an axis perpendicular to the plane of oscillation and passing through its centre of mass.
10. Determine the Moment of Inertia of a Flywheel.
11. Verification of Law of Moment using Rotation Disc Apparatus and Bell Crank Lever.

References:

1. Engineering Mechanics Lab manual.
2. S. Timoshenko, D. H. Young, J.V. Rao, S. Pati., Engineering Mechanics, 5th Edition, McGraw Hill Education.
3. Hibbeler R.C., Engineering Mechanics: Statics and Dynamics, 14th Edition, Pearson Education, Inc., New Delhi, 2022.

List of Augmented Experiments

1. Prepare a couple for any engineering application
2. Prepare a truss and draw a FBD for it
3. Find the centroid of a composite plane
4. Prepare a demonstrative model for different force systems
5. Analysis of Projectile Motion: Launch projectiles at different angles and measure their range, height, and time of flight. With an Objective: Verify the equations of motion for projectiles and determine the effect of launch angle on range and maximum height.

23EC202 Network Analysis and Simulation Lab (ECE)

0 0 3 1.5

Course Outcomes:

At the end of the course, Student will be able to

1 Analyze the DC Transients of RL & RC circuits
2 Make use of network theorems to simplify the electrical circuits
3 Analyze the DC Transients of RL & RC circuits
4 Demonstrate the characteristics of series RL, RC circuits
5 Demonstrate the characteristics of series RLC circuits and resonant circuit for given specifications
6 Characterize and model the network in terms of all network parameters: Illustrate Kirchhoff's laws, mesh, and nodal analysis for DC circuits

COs – POs Mapping

COs	PO4	PO5	PO6	PO9	PO12	PSO1	PSO2
CO1	3	2	1	1	1	1	1
CO2	3	2	1	1	1	1	1
CO3	3	2	1	1	1	1	1
CO4	3	2	1	1	1	1	1
CO5	3	2	1	1	1	1	1
CO6	3	2	1	1	1	1	1

3–Strongly linked | 2–Moderately linked | 1–Weakly linked

SYLLABUS:

The following experiments need to be performed using Simulation Software.

1. Verification of KCL and KVL for DC circuits.
2. Verification of mesh and nodal analysis for DC circuits
3. Verification of Superposition theorems for DC circuits
4. Verification of Thevenin's and Norton's theorems for DC circuits
5. Verification of Maximum power transfer theorem for DC circuits
6. Determination of Impedance and Power factor of Series RL & RC circuits
7. Determination of Active, reactive, and apparent power of Series RL & RC circuit
8. Determination of Impedance, Power factor, Active, Reactive, and Apparent power of a series RLC circuit
9. Construct a Series Resonance circuit to find the Q Factor and Bandwidth
10. Construct a Parallel Resonance circuit to find the Q Factor and Bandwidth
11. Determination of open circuit (Z) and short circuit (Y) parameters
12. Determination of hybrid (H) and transmission (ABCD) parameters
13. Analysis of DC transients in Series RL and Parallel RL circuits
14. Analysis of DC transients in Series RC and Parallel RC circuits
15. Analysis of DC transient and steady-state response of a 2nd order circuit by varying itsvarious parameters and studying their effects on responses.

Textbook (s):

1. M.E Van Valkenburg, Network Analysis, Prentice Hall of India, 3rd Edition, 2015
2. W.H.Hayt, J.E.Kimmerly, and S.M.Durb, Engineering circuit analysis, McGraw Hill Education private limited, 8th Edition, 2013

Software requirements:

Multisim/ Pspice/Orcad Equivalent simulation software tool, Computer Systems with requiredspecifications

References:

1. Network Analysis ME Van-Valkenburg, Prentice Hall of India, revised 3rd Edition,2019.

Engineering Circuit Analysis by William H. Hayt, Jack Kemmerly, Jamie Phillips,Steven M. Durbin, 9th Edition 2020

23EE202 Electrical Circuit Lab -EEE

0 0 3 1.5

Course Outcomes:

At the end of the course, Student will be able to

1. Demonstrate network reduction techniques using basic laws.
2. Compute the parameters of electrical equipment
3. Compute the parameters of magnetic circuit
4. Analyse series and parallel resonant circuits
5. Analyse maximum Power transfer from source to load
6. Apply network theorems to solve electrical circuits

COs – POs Mapping

COs	PO4	PO5	PO6	PO9	PO12	PSO1	PSO2
CO1	3	2	1	1	1	2	2
CO2	3	2	1	1	1	2	2
CO3	3	2	1	1	1	2	2
CO4	3	2	1	1	1	2	2
CO5	3	2	1	1	1	2	2
CO6	3	2	1	1	1	2	2

3–Strongly linked | 2–Moderately linked| 1–Weakly linked

List of Experiments

S.No	Name of Experiment	COs
	CYCLE 1 (Hardware)	
1	Verification of Kirchhoff's circuit laws.	CO1
2	Determination of self, mutual inductances, and coefficient of coupling.	CO3
3	Determination of Parameters of a choke coil.	CO2
4	Verification of Superposition theorem	CO6
5	Series and parallel resonance	CO4
	CYCLE 2 (Simulation)	
1	Verification of node and mesh analysis	CO1
2	Verification of Thevenin's and Norton's Theorems	CO6
3	Verification of Maximum power transfer theorem	CO5
4	Verification of Compensation theorem	CO6
5	Verification of Reciprocity and Millman's Theorems	CO6

List of Augmented Experiments:

1. Locus diagrams of R-L(L Variable) and R-C (C Variable) series circuits
2. Verification of network reduction techniques.
3. Determination of cold and hot resistance of an electric lamp
4. Determination of resonance frequency for a parallel tank circuit.
5. Verification of tellegan's theorem.

Reference Books:

1. W.H.Hayt, J.E.Kimmerly, and S.M.Durbin, "Engineering Circuit Analysis", Tata McGraw Hill, 8th Edition, 2015.
2. Charles K Alexander and Mathew N.O Sadiku, "Fundamentals of Electric Circuits", Tata McGraw Hill, 5th Edition, 2013.
3. M.E Van Valkenburg, "Network Analysis", Prentice Hall of India, 4th Edition, 2018.
4. P. Ramana, G.T.Chnadra Sekhar, G.Suresh, "Network Theory", SChand and Company Ltd., 1st Edition, 2024.

23CE201 ENGINEERING MECHANICS & BUILDING PRACTICES LAB-CIVIL

0-0-3-1.5

Course Outcomes:

At the end of the course, the student will be able to

1. Evaluate the coefficient of friction between two different surfaces and between the inclined plane and the roller.
2. Verify Law of Parallelogram of forces and Law of Moment using force polygon and bell crank lever.
3. Determine the Centre of gravity different configurations
4. Understand the Quality Testing and Assessment Procedures
5. Understand the principles of Non- Destructive Testing.
6. Exposure to safety practices in the construction industry.

COs – POs Mapping

COs	PO1	PO6	PO8	PO9	PO10
CO1	3	2	3	3	2
CO2	3	2	3	3	2
CO3	3	2	3	3	2
CO4	3	2	3	3	2
CO5	3	2	3	3	2
CO6	3	2	3	3	2

3–Strongly linked | 2–Moderately linked | 1–Weakly linked

Students have to perform any 10 of the following Experiments:

List of Experiments:

1. To study various types of tools used in construction.
2. Forces in Pin Jointed Trusses
3. Experimental Proof of Lami's Theorem
4. Verification of Law of Parallelogram of Forces.
5. Determination of Center of Gravity of different shaped Plane Lamina.
6. Determination of coefficient of Static and Rolling Friction.
7. Verification of Law of Moment using Rotation Disc Apparatus and Bell Crank Lever
8. Study of Alternative Materials like M-sand, Fly ash, Sea Sand etc.
9. Field-Visit to understand the Quality Testing - report.
10. Safety Practices in Construction industry
11. Demonstration of Non-Destructive Testing - using Rebound Hammer & UPV
12. Study of Plumbing in buildings.

References:

1. Engineering Mechanics and Building Practices Lab manual.
2. S. Timoshenko, D. H. Young, J.V. Rao, S. Pati., Engineering Mechanics, 5th Edition, McGraw Hill Education.
3. Hibbeler R.C., Engineering Mechanics: Statics and Dynamics, 14th Edition, Pearson Education, Inc., New Delhi, 2022.

23HSX03 Advanced Communicative English

(Language Elective for all B Tech Programmes)

2 0 0 2

Course Outcomes

1. Summarize the information while listening to English spoken in different social and workplace contexts
2. Play different roles in Group Discussions and make formal structured presentations on academic topics using PPT slides
3. Organize information from reading texts after selecting relevant and useful points
4. Paraphrase academic texts, prepare CV and make presentations and project reports
5. Apply the knowledge of grammar in both spoken and written communication with accuracy
6. Develop vocabulary to enhance communicative ability

COs – POs Mapping

CO's	PO1	PO2	PO3	PO4	PO5	PO6	PO7	PO8	PO9	PO10	PO11	PO12	PSO1	PSO2
CO1	1								1	3	1	2		
CO2	1								1	3	1	2		
CO3	1								1	3	1	1		
CO4	1								1	3	1	2		
CO5	1								1	3	1	1		
CO6	1								1	3	1	1		

3–Strongly linked | 2–Moderately linked| 1–Weakly linked

Unit I

Listening:Listening for presentation strategies and answering questions on the speaker, audience, and key points.

Speaking: Formal presentations using PPT slides without graphic elements and with graphic elements.

Reading: Reading for presenting – strategies to select, compile and synthesize information for presentation; reading to recognize academic style.

Writing: Paraphrasing; using quotations in writing; using academic style - avoiding colloquial words and phrases. Writing structured persuasive/argumentative essays on topics of general interest using suitable claims, examples and evidences for presenting views, opinions and position.

Grammarand Vocabulary: Formal/academic words and phrases; Phrasalprepositions; phrasal verbs

Novel: *Time Machine* by H G wells

15 Hours

Unit II

Listening: Following an argument/ logical flow of thought; answering questions on key concepts after listening to extended passages of spoken academic discourse.

Speaking: Group discussion on general topics; agreeing and disagreeing, using claims

Reading: Understand formal and informal styles; recognize the difference between facts and opinions.

Writing: Formal letter writing and e-mail writing (enquiry, complaints, seeking permission, seeking internship); structure, conventions and etiquette.

Grammar and Vocabulary: Language for different functions such as stating a point, expressing opinion, agreeing/disagreeing, adding information to what someone has stated, and asking for clarification.

Drama: Hayavadana by Girlish karnad

15 Hours

Unit III

Listening: Identifying views and opinions expressed by different speakers while listening todiscussions.

Speaking: Group discussion; reaching consensus in group work (academic context).

Reading: Identifying claims, evidences, views, opinions and stance/ position.

Writing: Applying for internship/ job **-** Writing one's CV/Resumeand cover letter.

Grammarand **Vocabulary:** Active and passive voice – use of passive verbs in academic writing.

Autobiography: Wings of Fire by Abdul Kalam

15 Hours

Unit IV

Listening: Understanding inferences; processing of information using specific context clues and processing of explicit and implicit information inferable from the text or from previous /back ground knowledge.

Speaking: Formal team presentations on academic/ general topics using PPT slides.

Reading: Reading for inferential comprehension.

Writing: Structure and contents of a Project Report; identifying sections in project reports; understanding the purpose of each section; significance of references.

Grammarand Vocabulary: Reinforcing learning; editing short texts; correcting common errors in grammar and usage.
Travelogue: Butter Chicken in Ludhiyana by Pankaj Mishra

15 Hours
Total: 60 Hours

Textbook (s)

1. *English All Round: Communication Skills for Undergraduate Learners*, vol.2, Published by Orient Black Swan, 2019.

Reference (s)

1. Chase, Becky Tarver. *Pathways:Listening, Speaking and Critical Thinking.*Heinley ELT; 2nd Edition, 2018.
2. Skillful Level 2 Reading & Writing Student's Book Pack (B1) MacmillanEducational.
3. Hewings, Martin.*Cambridge Academic English (B2)*. CUP, 2012. (Student Book, Teacher Resource Book, CD & DVD)
4. Bailey, Stephen. *Academicwriting: A handbook for international students*.Routledge, 2014
5. Dhanavel,S.P. *English And Communication Skills For Students Of Science And Engineering.* Orient Blackswan, 2009.

Web resource(s)

Grammar/Listening/Writing

1. 1-language.com
2. www.5minuteenglish.com
3. www.englishpractice.com

Grammar/Vocabulary

4. English Language Learning online
5. www.bbc.co.uk/learningenglish
6. www.better-english.com
7. www.nonstopenglish.com
8. www.vocabulary.com

Reading

9. www.usingenglish.com
10. www.englishclub.com
11. www.english-online.at

Listening

12. learningenglish.voanews.com
13. www.englishmedialab.com

Speaking

14. www.talkenglish.com
15. BBC Learning English – Pronunciation tips
16. Merriam-Webster – Perfect pronunciation Exercises

All Skills

17. www.englishclub.com
18. www.world-english.org
19. learnenglish.britishcouncil.org

Online Dictionaries

20. Cambridge dictionary online
21. MacMillan dictionary
22. Oxford learner's dictionaries

Internal Assessment Pattern

Cognitive Level	Int. Test 1 (%)	Int. Test 2 (%)	Assignment Test (%)
Remember	25	25	
Understand	25	25	
Application	50	50	40
Analysis	-	-	30

Evaluate	-	-	
Create	-	-	30
Total (%)	100	100	100

Sample question (s)

Remember

1. Write the meanings for the following phrasal verbs**.**
   i. look for ii. Break down
2. Use the following verbs in your own sentences
   i. Assess ii. Instruct

Understand

1. What are the steps that one should follow while preparing a PPT presentation.
2. Discuss the role of body language in group discussion.

Apply

1. Convert the following sentence into passive voice:
   a. The result surprises me. b. People speak English all over the world
2. Correct the following sentence:
   a. the tree is cut by man by an axe. b. he discussed about phonetics at length.
3. Write a formal letter to the Chief District Medical Officer of your district requesting him to utilize the NSS units of colleges to carry out public campaign to help people to stay safe from Covid-19. Use the clues below to write your letter:
   (For Open Book Examination and not for semester end examination)
   a) Stay home
   (b) Face mask
   (c) Sanitizer
   (d) Social distancing
   (e) Wash hands
   (f) Do not shake hands
   (g) Get medical check-ups

23HSX04 Communicative German

(Language Elective for all B Tech Programmes)

2 0 0 2

Course Outcomes

1. Demonstrate an awareness of the relevance of foreign languages and understanding of the foreign culture
2. Show a basic level of proficiency necessary in an environment where German is used professions and careers exclusively
3. Make use of German language in description, narration, asking/answering questions and short statements for the variety of topics and situations
4. Build familiar vocabulary, everyday expressions and very simple sentences, which relate to the satisfying of concrete needs
5. Comprehend the foreign language with sufficient ability to grasp the main idea and some supporting details in short conversations
6. Write sentences and short paragraphs in German language

COs – POs Mapping

CO's	PO1	PO2	PO3	PO4	PO5	PO6	PO7	PO8	PO9	PO10	PO11	PO12	PSO1	PSO2
CO1						1			1	3	1	2		
CO2						1			1	3	1	2		
CO3						2			1	3	1	1		
CO4						2			1	3	1	2		
CO5						3			1	3	1	1		
CO6						3			1	3	1	1		

3–Strongly linked | 2–Moderately linked | 1–Weakly linked

Unit-1

Grammar:

1) Nouns 2) Indefinite articles 3) Definite articles 4) Prepositions 5) Negation 6) Interrogatives 7) Conjugation of verbs in present perfect 8) Conjugation of verbs in present tense

15 Hours

Unit-2

Vocabulary:

1) Alphabet 2) Transport 3) Hobby4) Birthday 5) Colors 6) Numbers 0 to 100 (Ordinal, cardinal) 7) Parts of the face and body 8) Clothes 9) Fruits and vegetables 10) Time, Days, Months, Seasons

15 Hours

Unit-3

Communicative skills:

1) How to greet 2) Locating objects and places 3) How to ask and answer questions 1) How to introduce oneself4) How to talk about the weather5) How to talk over the telephone

Grammar:

1) Personal Pronoun 2) Imperative mood 3) Nominative and Accusative cases 4) Dative case 5) Adjectives 6) Separable and Inseparable verbs 7) Modal verbs 8) Conjunctions 9) Plurals

15 hours

Unit-4

Civilization:

1) Greetings2) Etiquettes3) Facts about Germany4) German customs and traditions5) Food culture in Germany

Vocabulary:

1) Food and Drinking 2) Family and Friends 3) Names of Country, its Citizens & Language 4) Vacation 5) Home 6) Furniture 7) Office 8) Directions 9) Shopping 10) Contacts 11) Daily routine 12) Games/Sports 13) Medical Equipment

15 hours

Total: 60 hours

Recommended study material:

1. Netzwerk A1 Kursbuch by Stefanie Dengler, Paul Rusch, Helen Schmitz, Tanja Sieber
2. Netzwerk A1 Arbeitsbuch by Stefanie Dengler , T Mayr-Sieber, Paul Rusch

23HSX05 Communicative French

(Language Elective for all B Tech Programmes)

2 0 0 2

Course Outcomes

1. Demonstrate an awareness of the relevance of foreign languages and understanding of the foreign culture
2. Show a basic level of proficiency necessary in an environment where French is used professions and careers exclusively
3. Make use of French language in description, narration, asking/answering questions and short statements for the variety of topics and situations
4. Build familiar, everyday expressions and very simple sentences, which relate to the satisfying of concrete needs
5. Comprehend the foreign language with sufficient ability to grasp the main idea and some supporting details in short conversations
6. Write sentences and short paragraphs in French language

COs – POs Mapping

Cos	PO_{10}	PO_{12}
1	3	1
2	3	1
3	3	1
4	3	1
5	3	1
6	3	1

3–Strongly linked | 2–Moderately linked | 1–Weakly linked

Unit-1

Grammar: 1) Nouns2)Indefinite articles3) Definite articles4) Prepositions5) Negation6) Interrogatives7) Irregular verbs (Present tense) : être8) Regular verbs (Present tense): -er 9) Expressions : c'est, cesont, il y a. 10) Imperative mood

15 Hours

Unit-2

Vocabulary: 1) Alphabet 2) Geography of France 3) Days4) Months5) Colours 6) Numbers 0 to 100 (Ordinal, cardinal) 7) Parts of the face and body

15 Hours

Unit-3

Communicative skills: 1) How to greet2) Locating objects and places3) How to ask and answer questions4) How to introduce oneself 5) How to talk about the weather6) How to talk over the telephone

Grammar: 1) Contracted Articles 2) Irregular verbs (present tense): avoir, aller, faire, venir, écrire, lire, recevoir. 3) Adjectives 4) Verbs: -ir (present tense) 5) Tense: futurproche 6) Impersonal verbs: pleuvoir ; neiger.
7) Possessive adjectives

15 hours

Unit-4

Civilization: 1)Greetings 2) Etiquettes3) Facts about France4) French customs and traditions5) Food culture

Vocabulary: 1) Clothes 2) Fruits and vegetables 3) Festivals

15 hours

Total: 60 hours

Recommended study material

1. **Sans frontieres 1**by Michèle Verdelhan-Bourgad

23HSX09 Communicative Hindi

(Language Elective for all B Tech Programmes)

2 0 0 2

Course Outcomes

1. Build confidence to speak Hindi language and demonstrate an awareness and relevance of Hindi language
2. Show a basic level of proficiency in speaking in meaningful conversations in careers
3. Make use of good vocabulary in description, narration, asking/answering questions and short statements for the variety of topics and situations
4. Practice familiar, everyday expressions and sentence structures, which relate to the satisfying of concrete needs
5. Comprehend the language and grasp the main idea and some supporting details in short conversations.
6. Write simple sentences and short paragraphs in Hindi language

COs – POs Mapping

CO's	PO1	PO2	PO3	PO4	PO5	PO6	PO7	PO8	PO9	PO10	PO11	PO12	PSO1	PSO2
CO1						1			1	3	1	2		
CO2						1			1	3	1	2		
CO3						2			1	3	1	1		
CO4						2			1	3	1	2		
CO5						3			1	3	1	1		
CO6						3			1	3	1	1		

3–Strongly linked | 2–Moderately linked | 1–Weakly linked

Unit I

Writing: Introduction to Alphabet (phonology) –classification; Mathra

Vocabulary: Useful words- home, animals, birds, vegetables, flowers, fruits, relationships, days, months

Grammar Noun, Pronoun, verb, adjective, adverb, post position, conjunction, interjection.

15hours

Unit II

Vocabulary: Antonyms, synonyms, gender, vachan, suffix, prefix

Speaking:. Simple sentences, comparative sentences, Sentence structures, use of want, not, don't, must, so-that, aa-ee-ye

Grammar: Tense, Usage of lag-sak-chuck-Degrees of comparison

15hours

Unit III

Writing: Official, Formal and informal letters

Speaking: Self- introduction, Conversations (at bank, post office, etc.)

Grammar and Vocabulary: Translations - words; sentences, paragraphs.

15hours

Unit IV

Writing: Short notes/stories, Essay writing

Speaking: Short talk and Conversations in travel, market etc

Vocabulary: Names of numerals, business vocabulary, time and scales of measurement etc.

15hours

Total: 60hours

Recommended Study material:

1.MeenuKaturia. *Saral Hindi Vyakaran tatha Rachana. Kumar publications Delhi.*

2. N.RajeshRakhade & G.kanaka Durga*. Hindi Speaking course,* Mudra Books. 2014

23MA301 Complex Variables
(Programme: ECE)

3 0 0 3

Course Outcomes

1. Understand the knowledge of Bessel's and Legendre's functions for solving engineering problems
2. Infer the calculus of complex valued functions with Cauchy-Riemann equations
3. Use Cauchy's theorem and Integral formulae to compute complex integrals
4. Outline the singularities of complex variable function Taylor's, Laurent's series
5. Select Residue theorem to determine various types of definite integrals
6. Compute calculus of complex functions and conformal mappings

COs – POs Mapping

COs	PO_1	PO_2	PO_3	PO_4	PSO_2
1	2				2
2	2				2
3	3	2	2		3
4	3	2	2	2	3
5	3	2		2	3
6	3	2	2	2	3

[1] 3–Strongly linked | 2–Moderately linked| 1–Weakly linked

Unit I
Special Functions

Bessel functions – Generating function, Jacobi series, Recurrence relations, Orthogonality, related problems Legendre's functions- Generating function, Rodrigue's formula, Recurrence relations, Orthogonality, related problems

Chebyshev's polynomials of first kind and second kind

12 Hours

Unit II
Functions of a complex variable and complex integration

Functions of a complex variable – Continuity, Differentiability, Analyticity, Properties, Cauchy-Riemann equations in Cartesian and polar coordinates (without proof), Harmonic and conjugate harmonic functions, Milne – Thomson method
Complex integration- Line integral, evaluation along a path and by indefinite integration, Cauchy's integral theorem, Cauchy's integral formula, Generalized integral formula (without proofs)

Elementary functions: General and principal values of elementary functions

12 Hours

Unit III
Complex power series and contour integration

Complex power series- Radius of convergence, Taylor's series, Maclaurin's series and Laurent series (without proofs)

Singular point –Types of singularities, Residue – Evaluation of residues, Residue theorem (without proof) Evaluation of integrals of the type

(a) Improper real integrals $\int_{-\infty}^{\infty} f(x)dx$ (b) $\int_{c}^{c+2\pi} f(\cos\theta, \sin\theta)d\theta$ (c) $\int_{-\infty}^{\infty} e^{imx} f(x)dx$

The Laplace inversion integral-Stability Criteria and evaluation of integrals by indentation

12 Hours

Unit IV
Calculus of complex functions and conformal mappings

Argument principle, Rouche's theorem - determination of number of zeros of complex polynomials, Maximum Modulus principle, Fundamental theorem of Algebra, Liouville's Theorem (Theorems without proof)

Conformal mapping -Translation, rotation, inversion, Transformation by e^z, z^2, z^n (n positive integer), sin z, cos z, z + a/z
Bilinear transformation – fixed point, properties, invariance of circles and cross ratio, determination of bilinear transformation

The Schwartz-Christoffel Transformation

12Hours
Total: 48 Hours

Textbook (s)

1. R.K.Jain and S. R. K Iyengar, Advanced Engineering Mathematics, Narosa Publishing House, 4th Edition, New Delhi, 2014
2. B.S.Grewal, Higher Engineering Mathematics, Khanna Publishers,42nd Edition, New Delhi, 2012
3. B. V. Ramana , Engineering Mathematics, Tata McGraw Hill, New Delhi, 4th Edition,2009

Reference (s)

1. Kreyszig, Irvin, Advanced Engineering Mathematics, Wiley India Pvt. Ltd, 9th Edition, 2012
2. T.K.V. Iyengar et. al, Engineering Mathematics, Volume-III, S. Chand Co., 2ndEdition, New Delhi, 2007
3. Ray Wylie and C.Louis Barrett, Advanced Engineering Mathematics, Tata McGraw-Hill PublishingCom. Ltd, 6th Edition, 2003

SAMPLE QUESTION (S)

Internal Assessment Pattern

Cognitive Level	Int. Test 1 (%)	Int. Test 2 (%)	Open book exam (%)
Remember	10	10	-
Understand	30	30	-
Apply	60	60	70
Analyze	-	-	30
Evaluate	-	-	-
Create	-	-	-
Total (%)	100	100	100

Remember

1. State the steps involved in solving difference equation using Z-transforms.
2. Define analytic function and write C-R equations in polar form.

Understand

1. Prove that $\int_C \frac{dz}{z-a} = 2\pi i$ where C is $|z-a| = r$
2. Interpret the transformation $w = \frac{1}{z}$ to find the image of $|z - 2i| = 2$ in complex plane.

Apply

1. Use Z-transforms to solve difference equation $u_{n+2} - u_n = 2^n$ with $u_0 = 0$ and $u_1 = 1$.
2. Implement residue theorem to evaluate the definite integral $\int f(z)dz$ over the circle $|z| = 2.5$

and $f(z) = \frac{z^2}{(z-1)^2(z+2)}$.

Analyze

1. Classify singularities of a complex valued function and also illustrate the examples for different types of singularities.
2. Justify that the function $f(z) = \sqrt{|xy|}$ is not analytic at the origin, although C-R equations are satisfied at that point.
3. Let $\phi(x, y)$ be an electrical potential in the region that satisfies the boundary values

$$\phi(x,y) = \begin{cases} 100 & for\ \ C_1 = \left\{ z = e^{i\theta} : 0 < \theta < \frac{\pi}{2} \right\} \\ 0 & for\ \ C_2 = \left\{ z = e^{i\theta} : \frac{\pi}{2} < \theta < 2\pi \right\} \end{cases} \quad .....(1)$$

and $w = f(z) = \frac{(1-i)(z-i)}{(z-1)}$ is a conformal mapping which maps the unit disc onto the upper half plane.

Here $z = x + iy$ is a point in xy - plane and $w = u + iv$ is a point in uv- plane.

[Open Book Examination Question]

a) Compute the transformed boundary conditions.
b) Determine the electrical potential in the unit disc satisfying the boundary conditions.
c) Estimate the electrical potential in the region bounded by triangle whose vertices are (0,0), (1,0) and (0,1) satisfying the given boundary conditions using suitable conformal mapping.

4. If $F(z) = -ikz\,(k > 0)$ describes a uniform flow upward, which can be interpreted as a uniform flow between two parallel lines,
   a. What happens to the flow if you replace z by $ze^{-i\pi/4}$ in $F(z)$
   b. Obtain a flow around a corner using suitable conformal mapping.

[Open Book Examination Question]

23EC301 Electronic Devices and Circuits

3 0 0 3

Course Outcomes

1. Explain characteristics and applications of semiconductor devices
2. Illustrate the characteristics of transistors
3. Construct different biasing circuits for BJT
4. Illustrate h-parameter representation and Hybrid-model of transistor
5. Analyse low frequency and high frequency single stage amplifiers
6. Construct multi stage amplifiers

COs – POs Mapping

COs	PO_1	PO_2	PO_3	PO_4	PSO_1
1	2				2
2	2				2
3	3	2	2		3
4	2			2	2
5	3	2	2	2	3
6	3	2	2	2	3

3–Strongly linked | 2–Moderately linked| 1–Weakly linked

Unit I

Semiconductors–Diodes

Construction and characteristics- PN Junction diode, Zener diode, Tunnel diode, Photo diode, light emitting diode, UJT and SCR, Transition and Diffusion Capacitance of PN junction diode. Rectifiers - Half wave rectifier, Full wave center Tapped rectifier, Bridge rectifier, overview of filters, Regulator using Zener diode.

Diode current equation, Diode Junction Breakdowns mechanisms

12 Hours

Unit II

BJT & FET

Bipolar Junction transistors **-** Transistor current components, Transistor as an amplifier, Input and Output characteristics of Common Base and Common Emitter configurations , BJT biasing - Criteria for fixing operating point, Self-bias, Thermal run away, Thermal stability, Characteristics of JFET, MOSFET characteristics- Enhancement mode and depletion mode.

Stabilization techniques, Compensation techniques

12 Hours

Unit III

Low Frequency Amplifiers

h-parameter representation of a transistor, Analysis of single stage transistor amplifier using h-parameters - Voltage gain, Current gain, Input impedance and Output impedance of CE, CB, and CC amplifiers using exact and approximate analysis. Analysis of single stage FET amplifiers - voltage gain, input impedance and output impedance of CS, CG, and CD amplifiers.

Buffer amplifier, MOSFET Amplifier

12 Hours

Unit IV

High Frequency and Multi Stage Amplifiers

Hybrid -CE transistor Model, Determination of Hybrid -Conductances, Miller's and Dual of Miller's theorem, CE Short Circuit Current gain, Parameters of f_β and f_T , Frequency response of RC coupled CE amplifiers. n–Stage Cascaded Amplifier, Darlington pair, Cascode amplifier, CE-CC Amplifiers.

Transformer coupled amplifier, CE current gain with load

12 Hours

Total: 48 Hours

Textbook (s)

1. J.Millman, C.C.Halkias and Chetan D Parikh, Integrated Electronics, 2nd Edition, Tata McGraw Hill, 2017
2. Robert L. Boylestad and Louis Nashelsky, Electronic Devices and Circuits Theory, Pearson/Prentice Hall, 11th Edition, 2015

Reference (s)

1. A.Salivahanan, N.Suresh Kumar, A.Vallavaraj, Electronic Devices and Circuits, Tata McGraw-Hill Publish-ing Company Limited, 2nd Edition, 2008
2. Visvesvara Rao, K. Bhaskara Rama Murty, K. Raja Rajeswari, P.Chalam Raju Pantulu, Electronic Devices and Circuits, Pearson Education, 2nd Edition, 2007
3. Millman and Grabel, Microelectronics, Tata McGraw Hill, 7thEdition, 2001
4. S.G.Burns and P.R.Bond, Principles of Electronic Circuits, Galgotia Publications, 2nd Edition, 1998

Sample Question (S)

Internal Assessment Pattern

Cognitive Level	Int. Test 1 (%)	Int. Test 2 (%)	Open Book Exam (%)
Remember	20	20	--
Understand	55	40	--
Apply	25	40	60
Analyse	--	--	40
Evaluate	--	--	--
Create	--	--	--
Total (%)	100	100	100

Remember

1. List any two advantages of JFET over BJT.
2. Define Rectifiers. List any two types of Rectifiers.
3. Define stability factor, S.
4. Reproduce the symbol of n type JFET.
5. Reproduce the symbol of p type JFET.
6. Arrange emitter, base and collector in increasing order of doping concentration.

Understand

1. Explain the consequences due to applied reverse voltage at Collector junction in CB configuration.
2. Represent the structure of JFET and explain the operation of n channel JFET.
3. Illustrate the current components of BJT.
4. Interpret FET as a Voltage Controlled Device.
5. Compare compensation techniques for the variations in ICO due to temperature.
6. Explain about thermal runaway.
7. Explain the Breakdown Mechanism in Semiconductor Diodes.
8. Explain the working principle of Tunnel diode with its V-I characteristics.

Apply

1. Find the value of IC and IE of a transistor at room temperature for Ico=5μA, IB=100μA and β= 100, If the temperature is raised by 100°C.
2. A full wave rectifier is designed with a 50μF capacitor in parallel with a 500Ω resistor. The transformer secondary voltage to centre-tap is 40V rms and 50Hz. The diode and transformer resistances may be ne-glected. Compute the followings:
   (i) Ripple factor of the rectifier-filter output
   (ii) % of load regulation

(iii) Repeat (i) and (ii) if 100μF capacitor in parallel with a 500Ω resistor.

3. Design a Self-biasing circuit as shown in figure such that IC= 5mA, VCE=8V, VE=6V, S=10, β=200 and VCC=20V.

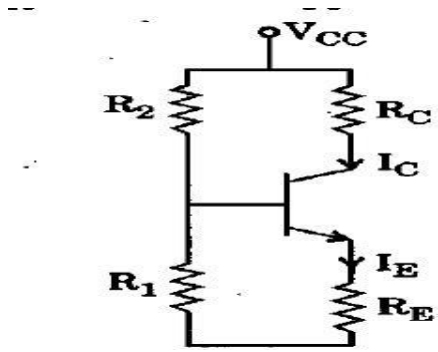

4. A circuit designer team-A has to design a biasing circuit using BC182 transistor. The purpose of biasing circuit is to produce faithful amplification to the input signal if the circuit operates in temperature range of 25°C to 75°C. The circuit designer team-B has provided the information to Team-B that if the operating point of the biasing circuit varies between (11.3mA, 5.67V) to (17mA, 2.48V) then also faithful amplifica-tion can be achieved. Design the biasing circuit.

5. A designer has to design a base resistor bias circuit for a CE amplifier such that operating point is VCE=8Vand IC = 2 mA. He is supplied with a fixed 15V d.c. supply and a transistor with β = 100. Take base-emitter voltage VBE = 0.6V and he has the liberty to use silicon or germanium transistor. Calculate also the value of load resistance that would be employed.

[Open Book Examination Question]

Analyse

1. Justify the small-signal voltage gain and input resistance of a common-emitter circuit with an emitter resistor.
   For the circuit in below figure, the transistor parameters are: β = 100, VBE(on) = 0.7 V.

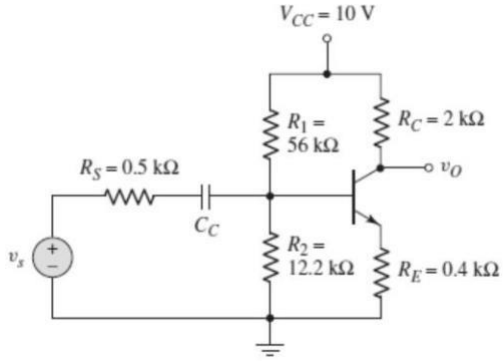

2. A high frequency amplifier uses a transistor which is driven from a source with Rs=0. Calculate value of fH, if RL =0 and RL=1kΩ. Assume typical values of hybrid-π parameters.

3. A circuit shown is to be a part of larger circuit which is expected to be operated at 25°C and 1000 Hz frequency. As a design engineer you are supposed determine the following parameters using the exact hybrid equivalent model and to prepare a detailed comparative analysis report of the results obtained using the approximate analysis.

(a) Input impedance and overall input impedance.

(b) Current gain and overall current gain.

(c) Voltage gain and overall voltage gain.

(d) Output impedance and overall output impedance.

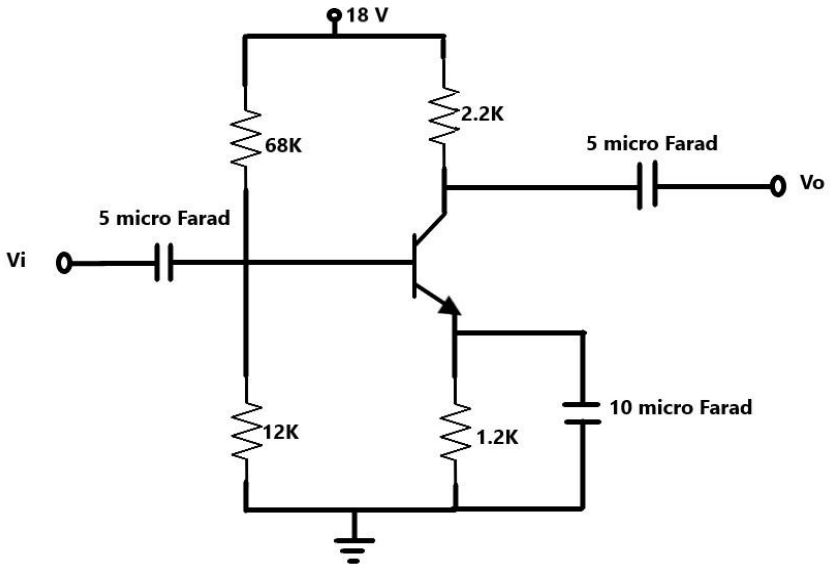

[Open Book Examination Question]

23EC302 Python Programming

3 0 2 4

Course Outcomes

At the end of the course, students will be able to

1. Illustrate the fundamentals of Python with syntax and semantics.
2. Use the concepts of conditional and control flow statements.
3. Demonstarte the concepts of strings, dictionaries, sets, list and tuples.
4. Demonstrate the concepts of Functions and Modules.
5. Use the concepts of files, searching and sorting mechanisms.
6. Demonstrate NumPy and Pandas.

COs – POs Mapping

COs	PO_1	PO_2	PO_4	PO_5	PSO_1
1	2		2	2	2
2	3	2	2	2	3
3	3	2	2	2	3
4	3	2	2	2	3
5	3	2	2	2	3
6	3	2	2	2	3

3–Strongly linked | 2–Moderately linked| 1–Weakly linked

Unit I

Introduction: Brief history and need for python programming, Running Python Scripts, Identifiers, Statements, Variables, Keywords, Input-Output statements, Indentation, command line arguments.

Data Types - Integers, Strings, Boolean **Operators**-Arithmetic, Comparison/Relational, Assignment, Logical, Bitwise, Membership, Identity

Expressions and order of evaluations- Precedence and Associativity.

Conditional Statements: Simple If, If-Else, Elif statement types, pass statements and iteration statements-While, For, Break, Continue

Applications of Python, REPL (Read, Evaluation, Print, Loop)

Practical Components

1. A) Write a Python program to perform the following operations on two integers a and b
   - Arithmetic operations
   - Logical operations

   B) Write a python Program to find the ASCII value of a Character and vice versa (use ord and chr methods).

   C) Write a python Program to convert a given decimal number into binary, octal and hexadecimal (use bin, oct and hex methods).
2. Write a Python program to check the given year is a leap year or not using if statement.
3. Write a Python program to use python generators to print all the prime numbers upto the given value n.
4. Write a Python program to check the given number is Armstrong or not using iteration statements.

12+8 Hours

Unit II

Introduction to Lists- List Traversals, Slicing, List Methods, List Comprehension and Multi-Dimensional List.

Introduction to Strings: String initialization and declaration, String Values, String Formatting and Multi Line Strings, String slicing.

Introduction to Tuple, Dictionary and Sets: Dictionary, dictionary operations and dictionary methods, Sets, set operations, Tuple, Tuple operations and methods

Methods Available in Python: eval syntax and its use cases, filter, reduce, map

Grouping with Dictionaries, Keyword Arguments

Practical Components

1. A) Write a Python program to flatten a nested list.

   B) Write a Python program to find the transpose of the matrix using list.

   C) Write a Python program to split a list into evenly sized chunks.

D) Write a Python program in a given list of numbers create another list of even numbers using list comprehension.

2. A) Write a Python Program to remove punctuations from a String.
   B) Write a Python program to count the frequency of characters in the string and store them in a dictionary data structure.
3. A) Write a Python program in a given a list of n numbers, form a tuple of two numbers such that highest maximum and lowest minimum are in one tuple, second max and second min in other tuple and so on
   Eg: Given list of numbers 1, 4, 6, 2, 3, 5
   Output: ((6, 1),(5,2), (4,3))
   B) Write a Python program to find the cube of a given number using lambda()/anonymous function.
4. A) Write a Python program to find the squares of the list of numbers using map function.
   B) Write a Python program to print all the combinations for the given list of numbers using itertools.
   C) Write a Python program to print all the permutations for the given list of numbers using itertools.

12+8Hours

Unit III

Functions - Defining Functions, Calling Functions, Types of Arguments, Anonymous Functions, Scope of the Variables in a Function - Global and Local Variables.

Modules and Packages- Creating modules, import statement, from. Import statement, Math and itertools modules.

Files-Creating files, operations on files - Open, Close, Read and Write.

Searching and Sorting: Searching techniques-Linear search and Binary search. Sorting techniques-Bubble sort.

Insertion sorting, Applications of packages.

Practical Components

1. Define a function and write a method which accepts multiple parameters/ arguments and find the sum of given parameters.
2. Write a Python program to find the sum of the elements in the array using reduce function of the python.
3. Write a Python program to search a key element in the list using linear search approach.
4. Write a Python program to sort the given list using bubble-sort technique

12+8 Hours

Unit IV

NumPy & Pandas

NumPy- NumPy Library Introduction, Create NumPy array in python, functions in NumPy library, indexing, slicing and assigning NumPy array's, operations in NumPy Library.

Pandas- Pandas Library Introduction, series structures in Pandas Library, DataFrame structures in Pandas Library, element selection operations in DataFrame structures, structural operations on Pandas DataFrame, Multi indexed DataFrame structures, Structural concatenation operations in DataFrame, Functions that can be applied on DataFrame.

Sorting, mapping of DataFrame

Practical Components

1. A) Write a python program to Convert the given list to numpy array.
   B) Write a Python program to Remove rows in numpy array that contains non-numeric values.
   C) Write a Python program to Find the number of occurences of sequence in numpy array.
2. A) Write a python program to Combine one and two – dimensional numpy array.
   B) Write a Python program to Perform matrix multiplication on numpy arrays.
3. A) Write a Python program Create a pandas data frame with two dimensional list
   B) Write a Python program to Create a data frame from dict of numpy array.
4. A) Write a Python program to Clean the string data in the given pandas data frame.
   B) Write a Python program on Conditional operations on pandas data frame

12+8 Hours
Total: 48+32 Hours

Textbook (s)

1. Richard L. Halterman, "Fundamentals of Python Programming" , 3rd Edition, Southern Adventist University, 2019.
2. Willaim Mckenny, "Python for Data Analysis: Data Wrangling with Pandas, NumPy, and IPython" 2nd Edition, O'Reily 2017.

Reference(s)

1. Wesley J Chun, "Core Python Applications Programming", 3rd Edition, Pearson Education India, 2015.
2. Kenneth A. Lambert. "Fundamentals of Python: First Programs", 2nd Edition, Publisher: Cengage Learning 2018
3. Python Programming: A Modern Approach, VamsiKurama, Pearson 2017 Learning Python, Mark Lutz, Orielly, 5th Edition

Internal Assessment Pattern

Cognitive Level	Int. Test 1 (%)	Int. Test 2 (%)	Lab Examination (%)
Remember	25	25	--
Understand	35	35	--
Apply	40	40	100
Analyze	--	--	--
Evaluate	--	--	--
Create	--	--	--
Total (%)	100	100	100

Sample Question(S)
Remember
1. What are the benefits of Python?
2. What is an Interpreted language?
3. List any four string handling functions.

Understand
1. Explain lists and tuples.
2. Differentiate between the lists and Tuples.
3. What are Dict and List comprehensions?

Apply
1. Write a program to read the contents of existing two files and merge the contents into "merge.txt".
2. Write a Python program to find maximum of two numbers using functions.
3. Write a python program to check whether the given number is palindrome or not.

23EC303 Logic Circuit Design

3 0 0 3

Course Outcomes

1. Illustrate the applications of Gates and Error Detection and Correction.
2. Identify a suitable tool (K-maps, Tabular etc.) to minimize Boolean expressions.
3. Implement combinational circuits using AOI and Universal logic gates.
4. Design combinational logic circuits using PLDs.
5. Analyse sequential logic circuits
6. Differentiate Mealy and Moore machines.

COs – POs Mapping

COs	PO_1	PO_2	PO_3	PO_4	PSO_1
1	2				2
2	2				2
3	3	2			3
4	3	2	2	2	3
5	3	2	2	2	3
6	3	2	2	2	3

3–Strongly linked | 2–Moderately linked| 1–Weakly linked

Unit I

Digital Logic Elements

Review of Basic Gates, EX-OR and EX-NoR gates, Universal Gates, realization of Gates using universal Gates, two level realization of logic functions using basic gates and universal Gates, Error Detection using parity bit, Error Detection and Correction using Hamming code. Applications of Gates.

Hexadecimal number system, Boolean rules

08 Hours

Unit II

Combinational Logic Circuits

Minterm, Maxterm, SOP, Standard SOP, POS, Standard POS, Minimization of logic functions using Karnaugh Map and Quine-McClusky method, Binary addition, Arithmetic Adders, Binary subtraction, subtraction using 1's complement and 2's complement methods, Arithmetic subtractors, Comparators, Ripple carry adder, carry look ahead adder, Encoder, Priority encoder, Decoder, Multiplexer, De-Multiplexer, Code converters,

GATES using MUX and Demultiplexers

16 Hours

Unit III

PLDs and Flip Flops

Programmable logic devices – PROM, PAL, PLA, Realization of Switching functions using PROM, PAL and PLA. Sequential logic circuits – RS latch using NAND and NOR Gates, Flip Flops – RS, J-K, T and D, Truth tables and Excitation Tables, Conversion of Flip Flops, Asynchronous Inputs.

Realisation of Flip Flops using MUX, CPLD

12 Hours

Unit IV

Sequential Logic Circuits

Registers - Buffer register, Controlled buffer register, Shift registers, Bi-directional shift register, Universal shift register, Asynchronous & Synchronous counters - Up, Down, Up down, Ring counters, Johnson counters, Mealy and Moore state machines – State assignment, state Diagram, state tables, Conversion of Mealy machine into Moore machine, Design of Mealy type serial adder and sequence detector, Minimization of completely specified state table using Partition table.

Sequence Generator, ASM Chart

12 Hours

Total: 48 Hours

Textbook (s)

1. A. Anand Kumar, Switching theory and logic design,PHI,3rd Edition 2016
2. Morris Mano, Digital Design,3rd Edition, PHI, 2001

Reference (s)

1. Zvi Kohavi, Switching & Finite Automata theory, 2nd Edition, TMH, 2008
2. R P Jain, Modern Digital Electronics, 3rd Edition, TMH, 2003

Sample Question (S)

Internal Assessment Pattern

Cognitive Level	Int. Test 1 (%)	Int. Test 2 (%)	Open Book Exam (%)
Remember	25	25	--
Understand	50	25	--
Apply	25	50	75
Analyse	--	--	25
Evaluate	--	--	--
Create	--	--	--
Total (%)	100	100	100

Remember

1. Retrive the decimal value of the fractional binary number 0.1011.
2. List any two postulates of Boolean algebra.
3. List the four uses of decoders.
4. Define Flip flop.
5. Define asynchronous sequential circuit.
6. List the difference between Synchronous and asynchronous

Understand

1. Explain how digital circuits are more frequently constructed with NAND or NOR gates than with AND & OR gates.
2. Represent the following Boolean expression to minterms and maxterms A+BC'+ABD'+ABCD.
3. Represent the Boolean function T=F (w, x, y, z)= ∑ m (0,1,2,4,5,7,8,9,12,13) by using 8 to 1mux.
4. Illustrate a half adder using NAND – NAND.
5. Represent a JK flip flop using SR flip flop.
6. Explain the operation of T-flip-flop.

Apply

1. Design a 4bit binary adder using Finate state machine.
2. In a certain application, four inputs A, B, C, D (both true and complement forms available) are fed to logic circuit, producing an output F, which operates a relay. The relay turns on when F(ABCD) = 1 for the following states of the inputs (ABCD):'0000', '0010', '0101', '0110', '1101' and '1110'. States '1000' and '1001' do not occur, and for the remaining states, the relay is off. Minimize F with the help of a Karnaugh map and realize it using a minimum number of 3 – input NAND gates.
   [Open Book Examination Question]
3. The digital logic shown in the figure satisfies the given state diagram when Q1 is connected to input A of the XOR gate. Suppose the XOR gate is replaced by an XNOR gate, from the following options predict the option which one preserves the state diagram (A) Input A is connected to compliment of 2 (B) Input A is connected to 2 (C) Input A is connected to compliment of 1 and S is complemented (D) Input A is connected to compliment of Q1.

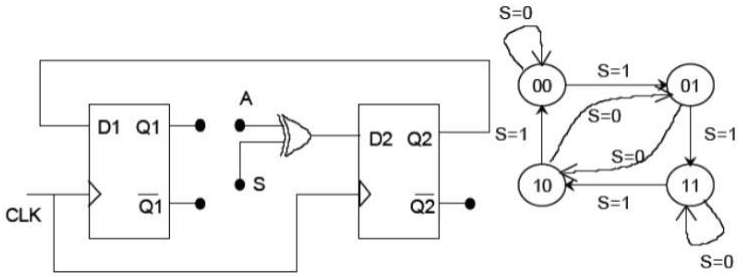

[Open Book Examination Question]

Analyse

1. Consider Eight people in a row identify number of males among them by using a Full adder.Note: consider Male=1 and female =0.
2. A milk vendor delivers one milk packet every day on some days he may not in a position to deliver the milk packet for various logistic reasons. There are 7 binary variable (D1, D2,…..D7) representing the delivery status every day (Di is 1 if milk is delivered else it is 0).Design a combinational circuit with minimum number of full adders to represent the sum of milk packets delivered in one week. Find the expression to calculate the amount of money to be paid if the cost of the milk per packet is Rs.15.Money is represented by M3 M2 M1 M0 and sum of milk packets is represented by S2 S1 S0).
   [Open Book Examination Question]

3. In a function hall, entry in to it is restricted to one person per minute. If the clock frequency is 1/60Hz, design a digital circuit to identify the number of groups formed entered in the following manner. Note: Male, Female, Male.
   [Open Book Examination Question]

23EC304 Random Variables and Stochastic Processes

3 0 0 3

Course Outcomes

1. Exemplify the probability theory concepts and Bayes theorem.
2. Illustrate the distribution and density functions of random variable.
3. Compute the moments of random variable.
4. Represent the statistical properties of multiple random variables.
5. Compute the joint moments and their functions.
6. Outline the statistical characteristics of random processes.

COs – POs Mapping

COs	PO_1	PO_2	PO_3	PO_4	PSO_2
1	2				2
2	2				2
3	3	2	2		3
4	2			2	2
5	3	2	2	2	3
6	3	2	2	2	3

3–Strongly linked | 2–Moderately linked| 1–Weakly linked..

Unit I

Probability Theory

Set theory, Classical definition of Probability, Probability as a Relative Frequency, Axioms of probability, properties, equality of events, borel fields, Joint Probability, Conditional Probability, Total Probability, Bayes' Theorem, Independent Events, Mutually Exclusive events, combined sample space, permutations, combinations, bernoulli trails. *Outage probability, Entropy*

11 Hours

Unit II

The Random Variable

Definition of a Random Variable, Conditions for a Function to be a Random Variable, Discrete and Continuous random variables, Distribution function, Density functions, Examples of random variables: Binomial, Poisson, Uniform, Gaussian, Exponential, Rayleigh, Conditional Distribution and density function, Expectation, Moments, Functions that give moments: Moment generation function, Characteristic function, Transformation of random variable. *Chebyshev Inequality, Chernoff bound, Schwarz Inequality*

13 Hours

Unit III

Multiple Random Variables

Vector random variables, Joint Distribution Function and properties, Marginal Distribution Functions, Joint density function and properties, Marginal density function, Conditional distribution and density, Statistical independence, Expectation, Joint moments, Joint moment generating function, Joint characteristic function, Jointly Gaussian random variable, Sum of random variables, central limit theorem.
Geometric random variable, Convergence of random variables

12 Hours

Unit IV

Random Processes

Temporal Characteristics: The Random Processes, Classification of Random Processes, Stationarity and Independence: Wide Sense Stationary processes, strict sense stationary processes, Time Averages and Ergodicity, Gaussian random processes. Spectral Characteristics: Power Spectral density and its Properties, Relationship between Power Spectrum and Autocorrelation Function, Cross Power Density Spectrum, Properties, Relationship between Cross Power Spectrum and Cross Correlation Function.
Markov processes, Wiener processes

12 Hours

Total: 48 Hours

Textbook (s)

1. A. Papoulis, S. U. Pillai, Probability, Random Variables and Stochastic Processes, 4th Edition, McGraw-Hill, 2002
2. Peyton Z. Peebles, Probability, Random Variables & Random Signal Principles, TMH, 4th Edition,2001

Reference (s)

1. Y.Mallikarjuna Reddy, Probability theory and Stochastic Processes, 4th Editions, Universities press, 2013
2. Oliver C Ibe, Fundamentals of applied probability and random process, Elsevier, 2005
3. R. D. Yates and D. J. Goodman, Probability and Stochastic Processes, 2nd Edition, Wiley, 2005
4. S. Haykin, Communication Systems, 4th Edition, John Wiley & Sons, 2001

Sample Question (S)

Internal Assessment Pattern

Cognitive Level	Int. Test 1 (%)	Int. Test 2 (%)	Open Book Exam (%)
Remember	20	15	--
Understand	55	60	--
Apply	25	25	70
Analyse	--	--	30
Evaluate	--	--	--
Create	--	--	--
Total (%)	100	100	100

Remember

1. Define probability as a relative frequency
2. Define the following terms: i) Independent events ii) Mutually exclusive events
3. State the conditions for random variable
4. List any two types of random processes

Understand

1. Illustrate Bayes theorem using total probability theorem
2. Summarize the properties of density function
3. Classify the moments of random variable
4. Indicate the conditions for the process to be WSS.

Apply

1. Box 1 contains 2000 diodes of which 10% are defective, Box 2 contains 3000 diodes of which 5% are defective. Two diodes are picked from randomly selected box. Find (a) The probability that both diodes are defective. (b) If both diodes are defective, what is the probability that they came from box 1.

2. Compute the Mean and Variance of Uniform density function having

$$f(x) = \frac{1}{(b-a)} \quad a \le x \le b$$
$$= 0 \quad else$$

3. Find the constant b such that the given function is valid joint density, and obtain their marginal densities.

$$f(x,y) = \begin{cases} b(x+y)^2 & -2 < x < 2, -3 < y < 3 \\ 0 & else \end{cases}$$

4. You have 1000 dollars to deposit in an account with interest rate R, compounded annually. If the sum assured is $X_n=1000(1+R)^n$ in 'n' years. The interest rate R is a random variable that is determined when you put the money in the bank, but it does not change after that. Let assume that R ~Uniform (0.04,0.05).
   i) Compute all possible sample functions for the random process Xn, {n=0,1,2,...}.
   ii) Find the expected value of your account at year three E[X3].
   iii) Find the mean functions for the random processes.
   iv) Compute the correlation functions and covariance functions for the random processes.
   [Open Book Examination Question]

5. As the nature of signal transmission over fading environment under weather conditions. The subscriber not received signal properly because he move from one area to another area. Estimate the expected signal with necessary assumptions.

   a. Hint: Fading – Rayleigh fading, rician fading.
   b. Area: Urban, Rural, Remote Area (FOREST)

   i) Compute the expected value and variance of radio signal using suitable moment function.
   ii) Select the suitable stochastic model of radio propagation under natural disasters with strong signal and Justify.
   [Open Book Examination Question]

Analyse

1. Justify that the average power Pxx of a WSS random process X(t) is defined as the time average of its second moment or autocorrelation function at $\tau = 0$
2. If the autocorrelation of a WSS process is $R_{xx}(\tau) = Ke^{-K|\tau|}$, conclude that its spectral density is given by
   $S(\omega) = 2/[1 +(\omega /K)^2]$
3. Consider a wireless propagation channel, with transmitted signal x(t) and received signal as y(t). Assume the process as stationary and random in nature. Noise is additive at the receiver. Under this scenario, it has mean 2 and the autocorrelation function is $R_{xx}(\tau) = 4 + \exp(-|\tau|/10)$. Outline the mean and variance of received signal $Y = \int_0^1 X(t)dt$

   [Open Book Examination Question]

4. In a radar system, the received signal gets disrupted by the randomness present in the channel, follows the uniform distribution and characteristics exhibits the random properties. Then for a random process
   $$X(t) = A\cos\omega_0 t$$
   Where ω_o is constant and A is uniformly distributed with mean 5 and variance 2. Outline the average power of X(t).

[Open Book Examination Question]

23EC305 Signals & Systems

3 0 2 4

Course Outcomes

1. Interpret various types of signals and systems and their operations
2. Explain signal approximation using Fourier series
3. Execute Fourier transform and Laplace transform of continuous signals
4. Summarise the characteristics of the LTI system and its properties
5. Compute LTI system response using convolution, correlation
6. Interpret sampling process and it's effects

COs – POs Mapping

COs	PO_1	PO_2	PO_3	PO_4	PO_5	PSO_2
1	2			2	3	2
2	2			2	3	2
3	3	2		2	3	3
4	2		2	2	3	2
5	3	2	2	2	3	3
6	2		2	2	3	2

3–Strongly linked | 2–Moderately linked| 1–Weakly linked

Unit I

Introduction: Signal Analysis

Classification of Continuous time & Discrete time signals, Concept of impulse function, unit step function, Signum function, Signal operations, Power and Energy of signals, Orthogonal signal space, Signal approximation using orthogonal functions, Mean square error, Orthogonality in complex functions.

EEG, ECG signals

Practical Components

1. Familiarization with SCILAB/MATLAB: Matrix operations, plotting, relational operators, loops and functions
2. Generation of basic signals: Exponential, step, impulse, ramp, sinusoidal signals
3. Operations on signals: time reversal, time shifting
4. Operations on signals: amplitude scaling, time scaling

10+8 Hours

Unit II

Fourier Series and Fourier Transform

Representation of Fourier series for Continuous time periodic signals, Dirichlet's conditions, , properties of Fourier series, Exponential Fourier series, Relationship between Exponential Fourier series and trigonometric Fourier series, Concept of Fourier transform, Fourier transform of arbitrary signal, Fourier transform of standard signals, properties of Fourier transforms, Parseval's theorem, Hilbert Transform, Review of Laplace transforms, Inverse Laplace transform, Concept of region of convergence, Relation between Laplace & Fourier Transform.

Fourier series coefficients of Conjugate symmetry for real signals, Laplace transform of causal periodic signals

Practical Components

1. Find the trigonometric Fourier series coefficients of a rectangular periodic signal and reconstruct the Signal by combining the Fourier series coefficients with appropriate weights
2. Verification of Parseval's theorem
3. Find the Fourier transform of a square pulse. Plot its amplitude and phase spectrum
4. Draw the pole zero plot of given transfer function

14+8 Hours

Unit III

LTI Systems

Linear system, impulse response, Linear time invariant (LTI) system, Transfer function of a LTI system, Filter characteristics of linear systems, Distortionless transmission through a system, Ideal filter characteristics, Causality and Paley-Wiener criterion for physical realization.

Concept of convolution in time domain and frequency domain, Graphical representation of convolution, Cross

correlation and auto correlation of functions, properties of correlation functions, Energy density spectrum, Power density spectrum, Relation between convolution and correlation.
Detection of periodic signals in the presence of Noise by Correlation, Group delay

Practical Components

1. Design the first order low pass passive filter for given specifications and Plot the magnitude and phase response
2. Design the first order high pass passive filter for given specifications and Plot the magnitude and phase response
3. Generate the response of an LTI system for the given input and impulse response
4. Write a program to Check the given system is linear or not

13+8Hours

Unit IV

Sampling Theory

Sampling theorem: Graphical and analytical proof for Band Limited Signals, impulse sampling, Natural and Flat top Sampling, Reconstruction of signal from its samples, Aliasing, Bandpss sampling theorem
Zero-order Hold sampling, Interpolation

Practical Components

1. Find the Nyquist rate for a given signal.
2. Generate a discrete time sequence by sampling a continuous time signal.
3. Reconstruction of a signal from the discrete samples with aliasing effect.
4. Reconstruction of a signal from the discrete samples without aliasing effect.

11+8Hours

Total: 48+32 Hours

Text Book (s)

1. A.V. Oppenheim, A.S. Willsky and S.H. Nawab, Signals and Systems, PHI, 2nd Edition, 2015
2. Won Y Yang, Signals and Systems with MATLAB, Springer publications, 2014
3. B.P. Lathi, Signals, Systems & Communications, BS Publications, 2008

Reference Book(s)

1. Michel J. Robert, Fundamentals of Signals and Systems, MGH International Edition, 2nd Edition 2017
2. Simon Haykin and Van Veen,Wiley, Signals & Systems, PHI, 2nd Edition, 2007
3. C. L. Philips, J.M.Parr and Eve A.Riskin, Signals, Systems and Transforms, Pearson education, 3rd Edi-tion, 2004

Sample Question (S)

Internal Assessment Pattern

Cognitive Level	Int Test 1 (%)	Int Test 2 (%)	Lab Examination (%)
Remember	35	20	--
Understand	40	30	--
Apply	25	50	100
Analyse	--	--	--
Evaluate	--	--	--
Create	--	--	--
Total (%)	100	100	100

Remember

1. Define impulse function.
2. List out any two Dirichlet's conditions.
3. State linearity property.
4. Define Nyquist rate.
5. List out any two types of sampling.
6. Define Laplace Transform
7. Define power and energy signals.

Understand

1. Classify two types of continuous time signals
2. Illustrate the relationship between exponential Fourier series and trigonometric Fourier series
3. Compare Autocorrelation and cross correlation function
4. Illustrate the effect of under sampling
5. Explain the properties of Region of convergence
6. Illustrate the orthogonality between two complex functions
7. Explain relation between Laplace and Fourier transform

Apply

1. Find the trigonometric Fourier series for the given signal.

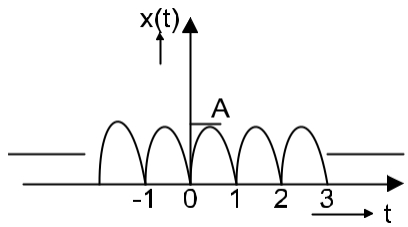

2. For the given signal x(t), find
   i. x(2t+5) ii. x(-t-2) iii. Even part of x(t)

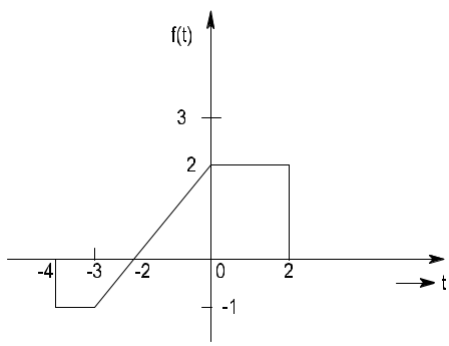

3. Find the Fourier transform and sketch its frequency spectrum of the following signals
   $x(t) = e^{-4t}\, u(t)$

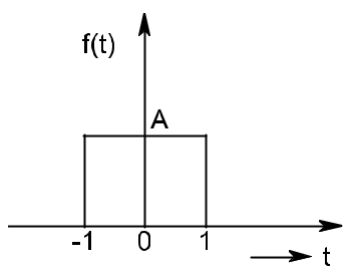

23EC306 Electronic Devices and Circuits Lab

0 0 3 1.5

Course Outcomes

1. Demonstrate the operation of rectifiers
2. Assess the characteristics of special semiconductor devices
3. Implement the applications based on semiconductor devices
4. Show the characteristics of BJT and FET
5. Demonstrate the characteristics of amplifiers
6. Assess the frequency response of amplifiers

COs – POs Mapping

COs	PO_1	PO_2	PO_3	PO_4	PSO_1
1	3	2		2	3
2	3	2		2	3
3	3	2		2	3
4	3	2	2	2	3
5	3	2	2	2	3
6	3	2	2	2	3

3–Strongly linked | 2–Moderately linked| 1–Weakly linked

List of Experiments
Students will perform minimum fourteen Experiments

1. Half wave rectifier with and without filter.
2. Full wave center tapped rectifier with and without filter.
3. Bridge type Full wave rectifier
4. Design of Zener regulator.
5. Characteristics of SCR
6. Characteristics of UJT
7. Transistor CE input characteristic
8. Transistor CE output characteristic
9. Transistor CB input characteristic
10. Transistor CB output characteristic
11. Design of self-bias circuit
12. JFET characteristics
13. Characteristics of CE Amplifier
14. Characteristics of CS Amplifier
15. Frequency response of CE amplifier
16. Frequency response of CS amplifier

List of Augmented Experiments*

1. Design of Regulated DC Power Supply
2. Applications based on FET
3. Applications based on BJT
4. Applications based on SCR
5. Burglar Alarm

Reading Material (s)

1. N.N.Bhargava, D.C.kulshreshtha S.C.Gupta, Basic electronics and linear circuits Tata MC Graw Hill com-pany Ltd., New Delhi, 2nd Edition, 2003.
2. R.L. Boylestad and Louis Nashelsky, Electronic Devices and Circuits, Pearson/Prentice Hall, 9thEdition, 2006.

* Students shall opt any one of the Augmented experiment in addition to the regular experiments

23EC307 Logic Circuit Design Lab

0 0 3 1.5

Course Outcomes

1. Demonstrate the functionality of Combinational logic ICs
2. Design the Boolean functions logic using logic gates
3. Implement the combinational logic using logic gates
4. Implement the flip-flops using logic gate
5. Design the shift registers
6. Design the counters

COs –POs Mapping

COs	PO_1	PO_2	PO_3	PO_4	PO_5	PSO_1
1	2			2		2
2	3	2		2		3
3	3	2		2	3	3
4	2		2	2	3	2
5	3	2	2	2	3	3
6	3	2	2	2	3	3

3–Strongly linked | 2–Moderately linked| 1–Weakly linked

List of experiments

Students will perform minimum fourteen Experiments

1. Implementation of basic gates by using universal gates.
2. Realization of a Boolean function by using NAND-NAND and NOR-NOR logic.
3. Design a half adder circuit using gates and implement full adder using half adder
4. Design a half subtractor circuit using gates and implement full subtractor by using half subtractor
5. Implementation of BCD adder using 4bit binary adders
6. BCD to excess- 3 code converter.
7. Design of binary to gray code converter
8. Design a 4X1 multiplexer and 1X4 Demultiplexer using logic gates
9. Design a 8X3 Encoder and 3X8 Decoder using gates
10. Design a simple 2-bit multiplier using half adders
11. Design a BCD to 7-segment decoder/driver
12. Implementation of 8 bit binary comparator using 4 bit binary comparators
13. Implementation of D and JK flip-flops using NAND gates
14. Implementation of three bit SISO and three bit PIPO shift registers
15. Design of three bit synchronous up counter
16. Design of three bit asynchronous down counter

List of Augmented Experiments*

1. Design a Universal shift register.
2. Design a sequence detector
3. Design of ALU
4. Design a Digital Clock

Reading Material (s)

1. Morris Mano, Digital Design, PHI, 3rd Edition, 2001
2. Charles H. Roth, Fundamentals of Logic Design, Thomson Publications, 3rd Edition, 2014

* Students shall opt any one of the Augmented experiment in addition to the regular experiments

23ESX01 Employability Skills I

0 0 2 0

Course Outcomes

1. Demonstrate oral communication and writing skills as an individual to present ideas coherently
2. Develop life skills with behavioral etiquettes and personal grooming.
3. Assess analytical and aptitude skills.
4. Develop algorithms for engineering applications.
5. Solve engineering problems using software.
6. Utilize simulation tools for testing.

COs – POs Mapping

COs	PO1	PO2	PO3	PO5	PO8	PO10	PO12
1						3	2
2					1	2	2
3	2	1			2		
4	2		2	2			
5	2		2	2			
6	2		2	2			

3–Strongly linked | 2–Moderately linked| 1–Weakly linked

Unit I

1. Communication Skills, Confidence and Quantitative Aptitude

How Communication Skills affect Confidence? How to communicate effectively.(with Examples)

Listening: Listening?, Listening Vs Hearing, Possible reasons for why people do not Listen at times, Active Listening Vs Passive Listening, How Listening can affect our relationships? How Listening helps in Campus Placements also? (with Examples)

Goal Setting: SMART Technique to Goal Setting, Putting First things First, SWOT Analysis and Time Management

Attitude & Gratitude: Attitude Vs Skills Vs Knowledge, Attitude Vs Behaviour, How to develop Positive Attitude? Developing the attitude of Gratitude.

Public Speaking: JAM, J2M, Presentations by Students on General Topics.

7 Hours

2. Quantitative Aptitude

Number system, L.C.M and H.C.F, Problems on Ages, Averages, Time and work, Pipes and cisterns

8 Hours

Unit II

Verilog Language Constructs and Gate Level Modelling

Verilog as HDL, Levels of design description, Concurrency, Simulation and Synthesis, Functional verification, System tasks, Programming Language Interface (PLI), Module, Simulation and Synthesis tools, Test benches, Keywords, Identifiers, White space characters, Comments, Numbers, Strings, Logic values, Strengths, Data types, Scalars and Vectors, Parameters, Memory, Operators, System tasks, AND gate primitive, Module structure, Other gate primitives, Tristate gates, Array of instances of primitives, Delays, Strengths and Contention Resolution, Net Types, Design of basic circuits. Design of Flip-flops with Gate Primitives, adders, Parameters, Path delays, Module parameters, Hierarchical access

Practical Components

1. Introduction to EDA tool and Simulation of logic gates
2. Design and Simulate Full adder and Full Subtractor
3. Simulate the Flip-Flops using the Gate Primitives

15 Hours

Total 30 Hours

23CSE01 Object Oriented Programming

3 0 0 3

Course Outcomes

1. Summarize object oriented programming concepts
2. Develop applications using different types of inheritances
3. Create simple applications using Interfaces, packages and collections
4. Analyse and recover runtime exceptions arise in the applications
5. Apply parallel processing applications using threads
6. Develop Interactive applications using AWT and Swing

COs–POs Mapping

COs	PO_1	PO_2	PO_3	PO_4	PO_5
1	3	2			1
2	2	-			-
3	3	2	2		2
4	2	-		2	-
5	2	1		2	2
6	3	2	2	2	-

3–Strongly linked | 2–Moderately linked | 1–Weakly linked

Unit I

Introduction to Java

Features of object oriented programming, Overview of Object Oriented Programming principles, Importance of Java to the Internet, Byte code, Methods, classes and instances, Data types, arrays, control statements, simple java program, Classes and Objects– constructors, methods, access control, this keyword, overloading methods and constructors, garbage collection, String handling methods and String Tokenizer.

Java History–Computer Programming Hierarchy–Role of Java Programmer in Industry **11 Hours**

Unit II

Inheritance, Packages & Interface

Inheritance: Basics, Using super, Multilevel Hierarchy, Method overriding, Dynamic Method Dispatch, Using Abstract classes, Using final with Inheritance.

Packages: Defining, Creating and Accessing a Package, Understanding CLASSPATH, importing packages, Member access rules.

Interface: Defining an interface, differences between classes and interfaces, implementing interface, variables in interface and extending interfaces, Nested–Inner Class & Anonymous Classes.

Generic Class Types **13 Hours**

Unit III

Exception Handling & Multithreading

Exception handling: Concepts and benefits of exception handling, exception hierarchy, usage of try, catch, throw, throws and finally, built-in and User Defined Exceptions.

Multithreading: Definition thread, thread life cycle, creating threads, synchronizing threads, daemon threads, Inter Communication of Threads.

Control Flow in Exceptions **11 Hours**

Unit IV

Event Handling

The AWT class hierarchy, user interface components labels, button, Text components

Event Handling: Events, Delegation event model, handling mouse and keyboard events, Adapter classes, inner classes, compare basic AWT components with swing components, more user interface components-canvas, scrollbars, check box, choices, lists panels–scroll pane, dialogs, menu bar, layout managers, *java.util Package.*

Anonymous Inner classes a Short–cut to Event Handling **13 Hours**

Total: 48 Hours

Textbook (s)

1. H. Schildt, Java: The complete reference, 8th Edition, TMH, 2011
2. T. A. Budd, An Introduction to Object–Oriented Programming, 3rd Edition, Addison Wesley Longman, 2002

Reference (s)

1. Dietal & Dietal, Java: How to Program, 8th Edition, PHI, 2010
2. C. Horstmann, BIG JAVA Compatible with Java 5 & 6, 3rd Edition, Wiley Publishers, 2008
3. C. S. Horstmann and G. Cornell, Core Java, Vol 1. Fundamentals, 7th Edition, Pearson Education, 2004

Sample Questions:

Internal Assessment Pattern

Cognitive Level	Int. Test 1 (%)	Int. Test 2 (%)	Open Book Exam (%)
Remember	25	20	--
Understand	35	30	--
Apply	40	50	50
Analyze	--	--	--
Evaluate	--	--	--
Create	--	--	50
Total (%)	100	100	100

Remember:

1. List any four primitive data types supported in Java.
2. Define an Interface and write the syntax to create an Interface.
3. List any 4 features of Object Oriented Programming.
4. Write the syntax for anonymous class.

Understand:

1. Does java support multiple inheritance? If so, how it can be achieved?
2. What is meant by an Array in Java?
3. Write a program that demonstrates the single and two dimensional int and float Array.
4. What is the purpose of method overloading in Java?
5. Write a Java program that demonstrates the method overloading.

Apply:

1. Consider a banking application which consists of the following operations for an account: checkBalance(), deposit(), withdrawal() and interest(). Create a base class Account which consists of the above mentioned methods. Demonstrate the same application using Dynamic Method Dispatch concept by creating a subclass for SBI which should have minimum balance of Rs.1000.

2. Write an abstract class called Shape consists of area () and perimeter () as abstract methods. Derive subclasses named Circle, Triangle, and Rectangle from Shape class with area () and perimeter () implementation. Write a test program that create objects for Circle, Triangle, and Rectangle and print the corresponding area and perimeter.

Analyze:

1. Analyze the differences between classes, abstract classes and interfaces with suitable examples.
2. Analyze member access rules with respect to same class, same package subclass, same package non-subclass, different package subclass and different package non-subclass with a suitable program.

Create:

1. Gopal is an athlete, striving hard for his running competition and decides to practice well for it. He wants to track his speed and decides to maintain the time taken for him for each of his practice session. He now decides to buy a stopwatch and approaches you. Now, design a stopwatch for John to track time in terms of minutes and seconds. Add functionalities like Start, Reset and Pause for the stopwatch. Use Applets, AWT components and Threads and implement the stopwatch.

2.Your company is designing a dam to be built across a stream to create a small lake. To reduce materials cost, it will be made of one or more concrete walls with mud packed in between them. Determine the maximum height of the mud segments in the dam with the following restrictions:

One unit width of the gap between walls will contain one segment of packed mud
The height of mud in a segment cannot exceed 1 unit more than an adjacent wall or mud segment.

Given the placement of a number of walls and their heights, determine the maximum height of a mud segment that can be built. If no mud segment can be built, return 0.

Function Description
Complete the function maxHeight() which takes the following parameter(s):
int wallPositions[n]: an array of integers
int wallHeights[n]: an array of integers
Returns:
int: the maximum height mud segment that can be build
Constraints
$1 < n \leq 105$
$1 \leq$ wallPositions[i], wallHeights[i] ≤ 109 (where $0 \leq i < n$)

Example
wallPositions = [1, 2, 4, 7]
wallHeights = [4, 6, 8, 11]

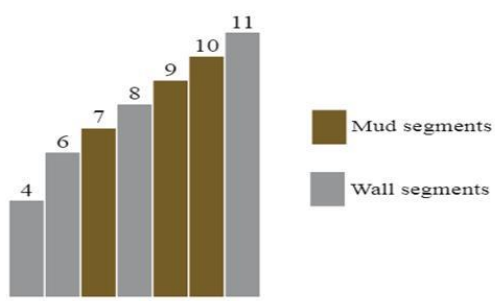

- There is no space between the first two walls.
- Between positions 2 and 4, there is one unit open for mud. Heights of the surrounding walls are 6 and 8, so the maximum height of mud is 6 + 1 = 7.
- Between positions 4 and 7 there are two units. The heights of surrounding walls are 8 and 11.
- The maximum height mud segment next to the wall of height 8 is 9.
- The maximum height mud next to a mud segment of height 9 is 10.
- Overall, mud segment heights are 7, 9 and 10, and the maximum height is 10.
  [Open Book Examination Question]

3. A word-ladder puzzle is one in which you try to connect two given words using a sequence of English words such that each word differs from the previous word in the list only in one letter position. For example, the figure below shows a word ladder that turns the word MIND into the word GAME using six single-letter steps.

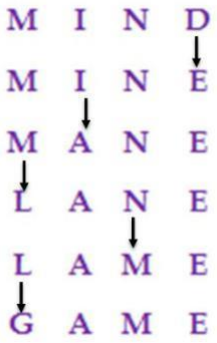

Write a program that checks the correctness of a word ladder entered by the user. Your program should read in a sequence of words and make sure that each word in the sequence follows the rules for word ladders, which means that each line entered by the user must

- Have the same number of characters as the preceding word
- Differ from its predecessor in exactly one character position.

All words being assumed to be in upper case. If the user enters a word that is not legal in the word ladder, your program should print out a message to that effect and let the user enter another word. It should stop reading words when the user enters a blank line. Thus, your program should be able to duplicate the following sample run that appears on the next page. **[Open Book Examination Question]**

23EC401 Analog and Digital Communications

3 0 0 3

Course Outcomes:

1. Explain Analog Modulation & Demodulation techniques
2. Summarise the noise level in Analog communication systems
3. Demonstrate the operations of Transmitters and Receivers
4. Explain different pulse modulation techniques
5. Illustrate different digital modulation and demodulation techniques
6. Illustrate different error control codes techniques

COs-POs Mapping

COs	PO_1	PO_2	PO_3	PO_4	PSO_2
1	2				2
2	2				2
3	3	2	2		3
4	3	2		2	3
5	2			2	2
6	3	2	2	2	3

3–Strongly linked | 2–Moderately linked| 1–Weakly linked

Unit I

Amplitude Modulation and Frequency Modulation

Introduction to communication system, need for modulation, Amplitude Modulation, power relations in AM waves, Generation and detection of AM waves: square law Modulator, envelope detector, Generation and detection of DSBSC Waves. SSB Modulated Wave, VSB modulation.

Frequency Modulation: FM Wave, Narrow band FM, Wide band FM, Generation and detection of FM Waves, Direct method of generation of FM waves, Balanced Frequency discriminator.

Switching modulator,-Frequency division multiplexing,

13 hours

Unit II

Noise, Analog Transmitters and Receivers

Noise in DSB & SSB System Noise in AM System, Noise in Angle Modulation System, Threshold effect in Angle Modulation System, Pre-emphasis & de-emphasis AM Transmitter, FM Transmitter - Variable reactance FM Transmitter, Super heterodyne receiver, Comparison of FM and AM Receiver.

Phase modulated FM transmitter, Phase locked loop

11 hours

Unit III

Pulse modulation

PAM, PWM, PPM, Model of Digital Communication Systems, Pulse Code Modulation: PCM Generation and Reconstruction, Quantization noise, Non uniform Quantization and Companding, Time Division Multiplexing, DPCM, DM and Adaptive DM.

Classification of line encoding techniques, TDM Frame Structures **12 hours**

Unit IV

Digital Modulations & Information theory

Digital Modulation Techniques: BASK, BFSK, BPSK, QPSK, generation and detection.

Baseband transmission: Base band signal receiver, probability of error and its analysis, the optimum receiver, matched filter.

Information Theory: Entropy, mutual information and Shannon's Channel Capacity Theorem, Fundamentals of error correction: Linear Block codes, cyclic codes, cyclic redundancy check

Telemetry, OQPSK

12 hours

Total: 48 hours

Textbook (s)

1. H.Taub and D. Schilling, Principles of Communication Systems, TMH,4th Edition, 2017
2. Simon Haykin , Digital communications, John Wiley, 4th Edition,2013
3. Simon Haykin , An Introduction to Analog& Digital Communications, John Wiley, 2nd Edition, 2012
4. George Kennedy and Bernard Davis , Electronic Communication Systems, TMH, 4th Edition, 2004

Reference (s)

1. R.P. Singh, SP Sapre, Communication Systems TMH, 3rd Edition, 2017
2. B.P.Lathi, Zhi Ding, Modern Digital and Analog Communication Systems, Oxford, 4th Edition, 2011
3. John G. Proakis, Masond, Salehi, Fundamentals of Communication Systems, Pearson Education, 3rd Edition, 2008
4. H Taub & D. Schilling, Gautam Sahe, Principles of Communication Systems , TMH, 3rd Edition. 2007
5. Sam Shanmugam, Digital and Analog Communication Systems, John Wiley, 2005
6. Bernard Sklar, Digital communications Fundamentals and applications, 2nd Edition, PHI, 2001

Sample Question (S)

Internal Assessment Pattern

Cognitive Level	Int. Test 1 (%)	Int. Test 2 (%)	Open Book Exam (%)
Remember	25	25	--
Understand	50	50	--
Apply	25	25	80
Analyse	--	--	20
Evaluate	--	--	--
Create	--	--	--
Total (%)	100	100	100

Remember

1. Define angle modulation.
2. Define modulation index.
3. List any two advantages of DSBSC.
4. List any two advantages of VSB.
5. Define quantization noise power.
6. Define QAM, and draw its constellation diagram.

Understand

1. Explain the need for modulation.
2. Illustrate the operation of square law modulator.
3. Compare SSB modulation with DSB-SC modulation.
4. Illustrate the operation of Frequency modulation.
5. Represent a neat block diagram of a typical digital communication system and explain the function of the key signal processing blocks.
6. Explain Binary PSK and QPSK with corresponding equations and constellation diagrams.

Apply

1. The antenna current of an AM transmitter is 8A when only the carrier is sent, but it increases to 8.93A when the carrier is modulated by a single sine wave. Calculate the percentage modulation. Find the antenna current when the percentage of modulation changes to 0.8.
2. An FM signal with single tone modulation has a frequency deviation of 15KHz and a bandwidth of 50KHz. Find the frequency of the modulating signal.
3. Execute the channel synchronization method in PCM systems.
4. A standard AM broad cast station is allowed to transmit 12 signals ,each band limited to 5KHz and are to be transmitted over a single channel by FDM. If AM –SSB modulation with guard band of minimum

value is used, Find the band width of the multiplexed signal. Predict the number of signals can be used if AM-DSBSC is used by the broad cast station instead of AM-SSB for the same bandwidth.
[Open Book Examination Question]

5. a)A QPSK signal is used to send data over a satellite transponder. The transponder has a bandwidth of 12MHz.A TV channel is planned to use two data rates of 18MHz and 28MHz.Find which data rate can be supported by the transponder and Justify the reason.
   b) For the same transponder ,Find whether the TV channel can use the data rates of 15MHz and 30 MHz or not.
   [Open Book Examination Question]

Analyse

1. Certain transmitter is radiating 132KW when a certain audio sinewave is modulating it to a depth of 80% and 150KW when a second sinusoidal audio wave also modulates it simultaneously. What is the depth of modulation for the second audio wave?
2. When the modulating frequencies in an FM system is 400Hz and the modulating voltage is 2.4v the modulation index is 60. What is the modulation index when the modulating frequency is reduced to 250 Hz and the modulating voltage is simultaneously raised to 3.2V Calculate the maximum deviation.
3. Outline the signal space diagram of quadrature amplitude modulation and its differences with respect to QPSK. Analyze different ways of increasing the efficiency of steam power plant by giving appropriate justification.
4. a) An All India radio station uses a carrier wave of 1MHz and whose amplitude is 3V is frequency modulated by a sinusoidal modulating signal frequency of 500Hz and of peak amplitude 1V.The peak deviation of the modulating wave form is 1KHz.The peak level of the modulating waveform is changed to 5V and the modulating frequency changed to 2KHz.Then find the expression for the new modulated wave and compare the parameters such as deviation ratio, Bandwidth and the number of side bands of FM waves.
   b) In the radio station if the carrier wave is changed to a square wave for the same specifications find the expression of the modulated wave and compare the parameters of the FM waves with sine and square modulating signals.
   [Open Book Examination Question]

5. a) In a music competition, recording is done by sampling and storing the sample values .If the highest frequency tone to be recorded is 15800Hz, Examine the number of sample would be required to store
   three minutes performance. Conclude the number of binary digits would be required to store the three minutes performance if each sample is quantized in to 128 levels.
   b)Find the number of binary digits required to store 5 minutes performance if each sample is quantized in to 64 levels.
   [Open Book Examination Question]

23EC402 Analog Electronic Circuits

3 0 2 4

Course Outcomes

1. Outline the negative feedback amplifiers
2. Design Sinusoidal oscillators for a given frequency
3. Design power amplifiers and demonstrate the tuned amplifiers
4. Construct linear & nonlinear wave shaping circuits for given application
5. Design Multivibrator for a given frequency
6. Summarize different Time base circuits

COs –POs Mapping

COs	PO_1	PO_2	PO_4	PO_5	PSO_1
1	3	2	2	3	3
2	3	3	2	3	3
3	2				2
4	3	2	2	3	3
5	3	2	2	3	3
6	2				2

3–Strongly linked | 2–Moderately linked| 1–Weakly linked

Unit I

Feedback Amplifier & Sinusoidal Oscillators

Feed Back amplifiers - Concept of feedback, Effect of negative feedback on the amplifier characteristics, Topologies, Voltage Series, Current Series, Voltage Shunt and Current Shunt feedback Amplifiers.

Oscillators- Condition for oscillations, Hartley oscillator, Colpitts oscillator, RC phase shift oscillator, Wein bridge Oscillator, Crystal Oscillator.

Clapp oscillator, Tuned collector oscillator, Stability of oscillators

Practical Components

1. Design and simulate current series feedback amplifier and observe its frequency response.
2. Design and simulate Hartley oscillator for given frequency and observe the desired output waveforms.
3. Design and simulate RC phase shift oscillator for given frequency and observe the desired output waveforms.
4. Design and simulate the Wein bridge oscillator for a given frequency and observe the desired output waveforms.

13+ 8 Hours

Unit II

Power Amplifiers & Tuned Amplifiers

Class A power amplifier, Efficiency of Class A power amplifier - Resistive load, Transformer load, Class B power amplifier- Efficiency of Class B power amplifier- Push Pull, Complimentary Symmetry, Class C power amplifier, Class D power amplifier.

Single Tuned Capacitive Coupled Amplifier - Quality factor of a tank circuit, Gain & Bandwidth, Stagger tuned amplifiers,

Application of Tuned Amplifiers, Neutralization techniques

Practical Components

1. Simulate a Class A resistive load amplifier and find the efficiency.
2. Simulate a Class A transformer load amplifier and find the efficiency.
3. Observe the frequency response of a single-tuned amplifier.
4. Observe the frequency response of a stagger-tuned amplifier.

12+ 8 Hours

Unit III

Linear & Non Linear Wave Shaping Circuits

Response of High pass & Low pass RC circuits with sinusoidal, step, pulse, square inputs. RC network as differentiator and integrator, Attenuators.

Diode clippers, Transfer characteristics of clippers, Comparators, Clamping operation, clamping circuits using diode with different inputs, Clamping circuit theorem.

Double differentiator, Applications of voltage comparators

Practical Components

1. Design and simulate a high-pass RC circuit for square wave input and observe the response.
2. Design and simulate a low-pass RC circuit for square wave input and observe the response.
3. Design and simulate different types of clipping circuits for given sinusoidal input and observe the desired output waveforms.
4. Design and simulate different types of clamping circuits for a given input and observe the desired output waveforms.

12+8 Hours

Unit IV

Non Sinusoidal Waveform Generators

Collector coupled Astable Multivibrator, Monostable Multivibrator, Bistable Multivibrator, Schmitt Trigger. General features of a time base signal, Voltage sweep generators using UJT, Miller and Bootstrap time base generators, Current time base generators.

Application of Multivibrator, Applications of Time base generators

Practical Components

1 Simulate the Astable multivibrator and observe the desired waveforms at each base and Collector.
2 Simulate the Monostable multivibrator and observe the desired waveforms at each base and Collector.
3 Simulate the Bistable multivibrator and observe the desired waveforms at each base and Collector.
4 Design and simulate UJT Relaxation Oscillator to generate time base signal.

11+8 Hours

Total : 48+32 Hrs

Textbook (s)

1. J.Millman, C.C.Halkias and Chetan D Parikh, Integrated Electronics, 2ndEdition, Tata McGraw Hill, 2017
2. A. Anand Kumar, Pulse and Digital Circuits, PHI, 2005

Reference (s)

1. K.Venkata Rao, K.Rama Sudha, Electronic Devices and Circuits, McGraw Hill, 1st Edition, 2015
2. VenkataRao.K, RamaSudha.K and Manmadha Rao.G, Pulse and Digital Circuits, Pearson Education, 1st Edition, 2012
3. Robert L. Boylestad and Louis Nashelsky, Electronic Devices and Circuits Theory, Pearson/Prentice, 11th Edition, 2012
4. J. Millman, H. Taub and M. Surya Prakash Rao, Millman's Pulse, Digital and Switching Waveforms, McGraw-Hill, 3rd Edition, 2010
3. M.H. Rashid, Thomson, Micro Electronic Circuits: Analysis and Design, PWS Publishers,1999

Sample Question (S)

Internal Assessment Pattern

Cognitive Level	Int. Test 1 (%)	Int. Test 2 (%)	Lab Examination (%)
Remember	20	20	--
Understand	40	40	--
Apply	40	40	100
Analyse	--	--	--
Evaluate	--	--	--
Create	--	--	--
Total (%)	100	100	--

Remember

1. Define characteristics of negative feedback amplifiers.
2. Define barhausian criteria.
3. Define Linear wave shaping circuits.
4. Define slope, displacement and transmission errors in voltage sweep generators.
5. State clamping circuit theorem.

Understand

1. Explain the operation of Hartley oscillator? Derive the expression for frequency of oscillation.
2. Illustrate the operation of crystal oscillator with equivalent circuits.
3. Compare positive and negative feedback amplifiers.
4. Illustrate the response of High pass RC circuit to square wave input.
5. Explain the working of boot strap time base generator with transistor.

Apply

1. Compare the performance of Class A and class B amplifier.
2. Draw the practical circuit of current series and voltage series negative feedback amplifier.
3. Show a high pass circuit having a time constant smaller than the time period of input signal behaves as a differentiator.
4. Design a symmetric collector-coupled astable multivibrator to genereate the square wave of 10 kHz having peak to peak amplitude 10V where hfe(min)=30, Ic=2mA.
5. Design a Schmitt trigger circuit for the following specifications: UTP=8V,LTP=5V, Vcc =15V, hfe=25 and Ic =2mA.

23EC403 Electromagnetic Waves & Transmission Lines

3 0 0 3

Course Outcomes:
1. Demonstrate the laws & theorems of static electric and magnetic fields.
2. Demonstrate the behaviour of time-varying electromagnetic fields using Maxwell's equations.
3. Outline the electromagnetic wave propagation in different media.
4. Demonstrate the characteristics of EM waves.
5. Illustrate the parameters of transmission lines.
6. Outline the impedance transformation techniques.

COs – POs Mapping

COs	PO_1	PO_2	PO_3	PO_4	PSO_2
1	2				2
2	2				2
3	3	2	2		3
4	2			2	2
5	3	2	2	2	2
6	3	3	2	2	3

3–Strongly linked | 2–Moderately linked| 1–Weakly linked

UNIT I

Static Electric and Magnetic Fields: Review of Co-ordinate Systems, Coulomb's Law, Electric Field Intensity, Electric Flux Density, Gauss Law and Applications, Electric Potential, Energy Density, Illustrative Problems, Biot-Savart Law, Ampere's Circuital Law and Applications, Magnetic Flux Density, Magnetic Scalar and Vector Potentials, Forces due to Magnetic Fields, Illustrative Problems. **12 Hours**

Capacitance of parallel plate, coaxial and spherical capacitors, Inductance of solenoid and toroid

UNIT II

Maxwell's Equations : Faraday's Law and Transformer EMF, Inconsistency of Ampere's Law and Displacement Current Density, Maxwell's Equations in differential & integral forms along with word Statements, Conditions at a Boundary Surface, Illustrative Problems, Wave Equations for Conducting and Perfect Dielectric Media, Uniform Plane Waves – Definition, Relation between E & H components, Wave Propagation in perfect dielectrics, free space, good dielectrics, good conductors, skin depth, Illustrative Problems. **12 Hours**

Surface Impedance, Power Loss in a Plane Conductor

UNIT III

EM Wave Characteristics: Polarization & Types, Reflection and Refraction of Plane Waves – Normal and Oblique Incidences for both Perfect Dielectric and Perfect Conductor, Brewster Angle, Critical Angle and Total Internal Reflection, Poynting Vector and Poynting Theorem, Illustrative Problems. **10 Hours**

Time harmonic fields, Complex Poynting vector

UNIT IV

Transmission Lines: Types, Equivalent Circuits, Transmission Line Equations, Primary & Secondary Constants, Expressions for Characteristic Impedance, Propagation Constant, Phase and Group Velocities, Infinite Line, Lossless lines, distortion less lines, Illustrative Problems, Input Impedance Relations, Reflection Coefficient, VSWR, Average Power, Open & Short Circuited Lines, and Matched Lines, Low loss radio frequency and UHF Transmission lines, UHF Lines as Circuit Elements, Smith Chart – Construction and Applications, Quarter wave transformer, Illustrative Problems.

14 Hours

Single Stub Matching, Double Stub Matching

Textbook (s)

1. Matthew N.O. Sadiku, Elements of Electromagnetics, Oxford University Press, 7th Edition, 2020.
2. Transmission Lines and Networks, Umesh Sinha, 8th Edition, Satya Prakashan Tech. India Publications, New Delhi, 2003.

3. Gottapu Sasibhushana Rao, Electromagnetic Field Theory and Transmission Lines, Wiley Publishers, 1st Edition, 2012.
4. John A. Buck, William H. Hayt, Engineering Electromagnetics, Tata McGraw Hill, 8th Edition, 2011.

Reference (s)

1. Electromagnetic Waves and Radiating Systems, E.C. Jordan and K.G. Balmain, 2nd Edition, PHI, 2000.
2. Joseph Edminister, Electromagnetics, Schaum Outline Series, McGraw Hill, 2nd Edition, 2007.
3. Networks, Lines, and Fields, John D. Ryder,2nd Edition, PHI publications, 2012.
4. G.S.N. Raju, Electromagnetic Field Theory and Transmission Lines, Pearson Education, 1st Edition, 2006.

Sample Question (S)

Internal Assessment Pattern

Cognitive Level	Int. Test 1 (%)	Int. Test 2 (%)	Open Book Exam (%)
Remember	20	20	--
Understand	55	55	--
Apply	25	25	60
Analyse	--	--	40
Evaluate	--	--	--
Create	--	--	--
Total (%)	100	100	100

Remember

1. List co-ordinate systems.
2. State Gauss Law.
3. State Stokes theorem.
4. State Coulomb's law.
5. List the four Maxwell's Equations.
6. Define Uniform Plain Wave.
7. Define Vector Magnetic Potential.

Understand

1. Illustrate the significances of gradient, divergence, curl.
2. Explain Four point charges each 20μC are on x and y axis at ±4 m. Find the force on a 100μC point charge at (0,0, 3)m.
3. Illustrate ampere's law.
4. Formulate the relationship between unit vectors of Cartesian and Cylindrical Coordinates.
5. Formulate the Electric field intensity due to a circular disc of charge density ρs C/m^2 .
6. Explain Skin Effect.
7. Explain Wave Polarization.

Apply

1. A circular ring of charge with radius 2m, lies in z = 0 plane with center at origin. The charge density on the ring is 10nC/m. Find the point charge q at the origin which produces the same electric field at (0, 0, 5)m on that of the ring at the same point.

2.Two extensive homogeneous isotropic dielectric meet on plane for z>0 $\varepsilon_{r1} = 4$ and for z<0 , $\varepsilon_{r2} = 3$. A uniform electric field $\boldsymbol{E_1} = 5\boldsymbol{a_x} - 2\mathbf{a_y} + 3\mathbf{a_z}$ KV/m exists for $z \geq 0$. Find (i) $\boldsymbol{E_2}$ for $z \leq 0$ (ii) The energy densities (in J/m^3) in both dielectrics (iii) The energy within a cube of side 2m centered at (3,4,-5).

3. Given a uniform plane wave in air as

$\boldsymbol{E_i} = 40\cos(wt - \beta z)\,\boldsymbol{a_x} + 30\sin(wt - \beta z)\boldsymbol{a_y}$ V/m

(i)Find $\boldsymbol{H_i}$ and if the wave encounters a perfectly conducting plate normal to the z axis at z=0 an also find reflected wave $\boldsymbol{H_r}$, $\boldsymbol{E_r}$.

(ii**)**What are the total E and H fields for $z \leq 0$ and calculate the time average pointing vectors for$z \leq 0$ and $z \geq 0$.

4. Determine **D** at (4, 0, 3) if there is a point charge -5π mC at(4,0,0) and a line charge 3π mC/m along y axis.
5. Find the energy in the system for three different point charges $-1nC, 4nC\ and 3nC$ are located at (0.0, 0), (0,0,1) and (1,0,0) respectively.
6. You are given four slabs of lossless dielectric, all with the same intrinsic impedance, η, known to be different from that of free space . The thickness of each slab is ʎ/4 , where ʎ is the wavelength as measured in the slab material. The slab are to be positioned parallel to one another, and the combination lies in the path of a uniform plane wave , normally incident . The slabs are to be arranged such that the air spaces between them are either zero, one –quarter wavelength, or one – half wavelength in thickness. Specify an arrangement of slabs and air such that: (a) The wave is totally transmitted through the stack.
   (b) The stack present the highest reflectivity to the incident wave. Several answers may exist.
   [Open Book Examination Question]

7. An empty metal paint can is placed on a marble table , the lid is removed , and both parts are discharged by touching to ground . An insulating nylon thread is glued to the center of the lid and a penny, a nickel and a dime are glued to the thread so that they are not touching each other. The penny is given a charge of +5nC and the nickel and dime are discharged. The assembly is lowered into the container so that the coins hang clear of all walls, and the lid is secured. The outside of the container is again touched momentarily to ground. The device is carefully disassembled with insulating gloves and tools. (a) What charges are found on each of the five metallic pieces? (b) If the penny had been given a charge of +5nC, the dime a charge of -2nC, and the nickel a charge of -1nC, what would the final charge arrangement have been?
   [Open Book Examination Question]

Analyse

1. If $\mathbf{A} = \rho\cos\phi\, \boldsymbol{a_z} + sin\phi \boldsymbol{a_\phi}$ evaluate $\oint \boldsymbol{A.dl}$ around the path as shown in figure , and confirms this by using stokes theorem

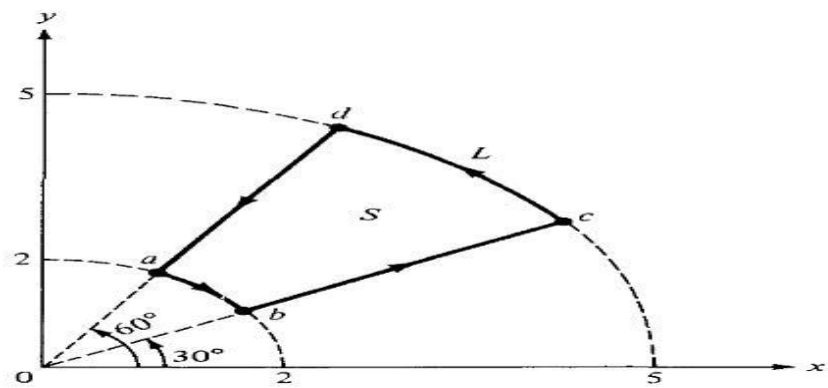

2. Given that $\mathbf{F} = x^2 y\, \mathbf{a_x} - y\, \mathbf{a_y}$. Find the $\oint \boldsymbol{F.dl}$ around the path L as shown in figure and confirm the result by Stokes theorem.

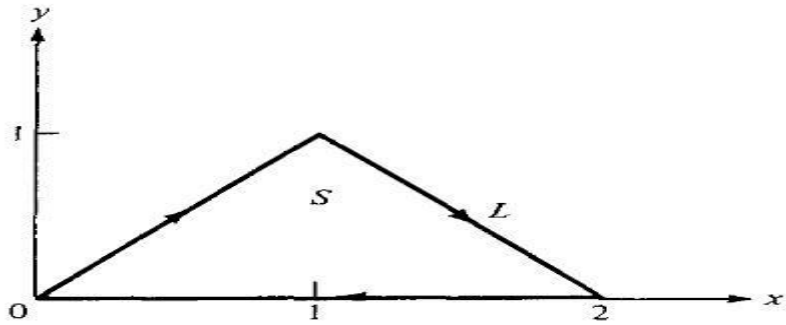

3. Determine the flux of $\mathbf{D} = \rho^2 \cos\phi^2 \, \boldsymbol{a}_\rho + z \, sin\phi \boldsymbol{a}_\phi$ over the closed surface of the cylinder $0 \le z \le 1, \rho = 4$. Verify the divergence theorem for this case.

4. A charge distribution with spherical symmetry has density

$$\rho_v = \begin{cases} \frac{\rho_o r}{R} & 0 \le r \le R \\ 0, & r > R \end{cases}$$

Determine **E** everywhere.

5. The electric field and, magnetic field in space are

$$E = \frac{50}{\rho} \cos(10^6 \, t + \beta z) \, \boldsymbol{a}_\emptyset \text{ V/m}$$

$$H = \frac{H_o}{\rho} \cos(10^6 \, t + \beta z) \, \boldsymbol{a}_\rho \text{ A/m}$$

Express these in phasor form and determine the constants H_o *and* β such that the fields satisfy Maxwell's equation.

6. In an ink-jet printer the drops are charged by surrounding the jet of radius 20 μm with a concentric cylinder of radius 600 μm as show in figure . Calculate the minimum voltage required to genarate a charge 50 fC on the drop if the lengh of the jet inside the cylinder is 100 . Consider $\varepsilon = \varepsilon_0$ $= 0$

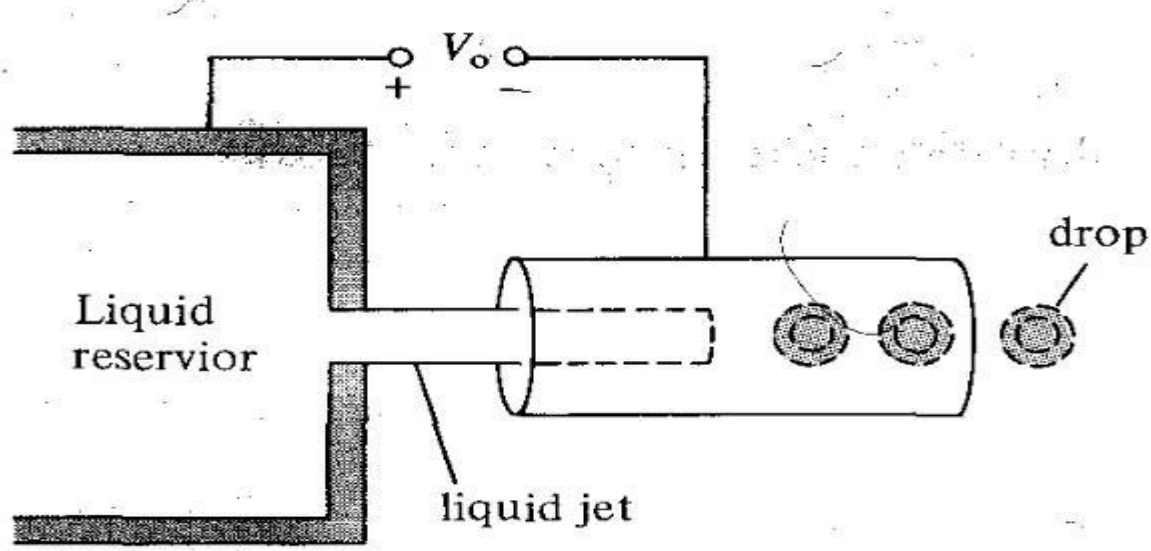

[Open Book Examination Question]

7. The electric motor shown in figure has filed

$$H = \frac{10^6}{\rho} \sin 2\emptyset \, a_\rho \text{ A/m}$$

Calculate the flux per pole passing through the air gap if the axial length of the pale is 20cm

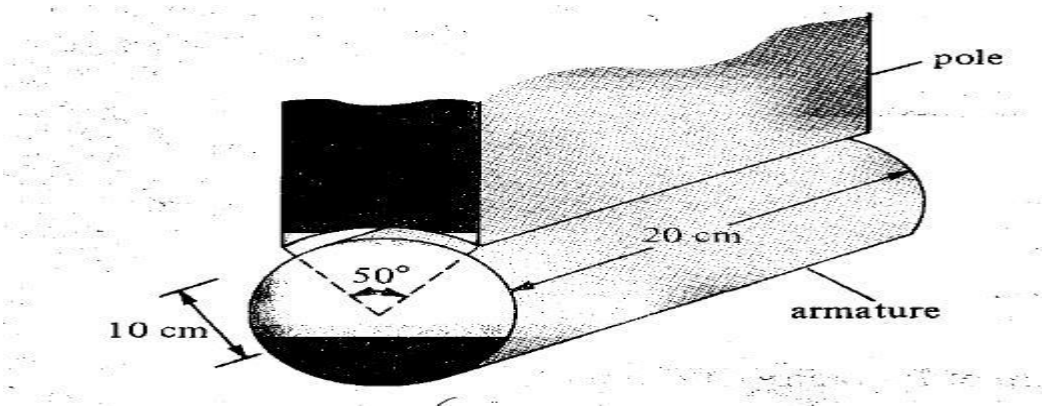

[Open Book Examination Question]

23EC404 Linear Control Systems

3 0 0 3

Course Outcomes

1. Identify openloop and closed loop control systems and formulate the mathematical model
2. Interpret block diagram representation and signal flowgraph of control system
3. Demonstrate time response of system, Routh-Hurwitz , and rootlocus stability criterion
4. Illustrate the stability of a system using frequency domain techniques
5. Design different compensators and controllers in time/frequency domain
6. Outline the state space modeling of physical systems

COs – POs Mapping

COs	PO_1	PO_2	PO_3	PSO_1	PSO_2
1	2			2	2
2	2			2	2
3	3	2		3	3
4	2		2	2	2
5	3	2	2	3	3
6	3	3	2	3	3

3–Strongly linked | 2–Moderately linked| 1–Weakly linked

Unit I

Mathematical Models Of Physical Systems

Concepts of Control Systems- Open Loop and closed loop control systems, Classification of control systems, Modeling of Electric systems, Translational and rotational mechanical systems, Block diagram reduction technique, Signal flow graph, Mason's gain formula, Feedback Characteristics-Effects of feedback.

Effect of feedback on disturbance, Linearization of nonlinear mathematical models **11Hours**

Unit II

Time Domain Analysis

Standard test signals, Time responses of first order and second order systems, time domain specifications, characteristic Equation, Static error constants, Generalized error series, The concept of stability, Routh-Hurwitz stability criterion, Difficulties and limitations in RH stability criterion, Root locus concept, Construction of root
loci, Stability analysis using root locus, Effects of addition of poles and zeros on root
locus. *Root loci for systems with transportation lag, Dominant closed loop poles* **13 Hours**

Unit III

Frequency Domain Analysis

Frequency response characteristics, Frequency domain specifications, Time and frequency domain parameters correlations, Bode plot, transfer function from the Bode plot, Stability Analysis using Bode Plot, Polar Plot, Nyquist's stability criterion, Effect of PI, PD, PID controllers, Lag, Lead, Lead-Lag Compensators design using Bode plot.

M & N circles, Nicholas Chart **14 Hours**

Unit IV

State Space Analysis

Concepts of state, state space modeling of physical systems, Representation of state space model in different canonical forms, Transfer function and state space model correlations, Solution of state equations, State Transition Matrix and it's Properties, Controllability and Observability.

Eigen vectors and Diagonalization **10 Hours**

Total: 48 Hours

Text Book (s)

1. I.J. Nagrath and M. Gopal, Control Systems Engineering, New Age International (P) Limited, 2nd edition, 2018
2. B. C. Kuo, Automatic Control Systems, John wiley and sons, 8th edition, 2014

Reference Book (s)

1. Norman. S. Nise, Control Systems Engineering, John wiley & Sons, 3rd Edition, 2018
2. K.Alice Mary and P.Ramana, Control Systems, Universities Press, 1st edition, 2016
3. Katsuhiko Ogata, Modern Control Engineering, Prentice Hall of India Pvt. Ltd., 3rd edition, 2015
4. Joseph J Distefano, Schaum's Series of Feedback and Control Systems, McGra Hill, 3rd edition, 2013

Sample Question (S)

Internal Assessment Pattern

Cognitive Level	Int. Test 1 (%)	Int. Test 2 (%)	Open Book Exam (%)
Remember	25	15	--
Understand	50	35	--
Apply	25	50	60
Analyse	--	--	40
Evaluate	--	--	--
Create	--	--	--
Total (%)	100	100	100

Remember

1. Define a closed loop control system.
2. List any 4 applications of closed loop control system.
3. Define transfer function.
4. List 2 advantages of Signal flow graph over Block-diagram reduction technique.
5. List any 3 properties of state transition matrix.
6. Label different types of frequency domain analysis methods.
7. List the two advantages of Bode Plot.
8. Define Centroid.

Understand

1. Compare SISO and MIMO systems.
2. Explain the traffic control system concepts using open loop as well as closed loop system.
3. Explain f-v and f-i analysis.
4. Explain different cases in R-H criteria.
5. Represent state transition matrix.
6. Explain Mason's gain formula.
7. Represent two difficulties in R-H Criteria and explain.
8. Compare and give correlation between time domain specifications and frequency domain specifications.

Apply

1. Find Open Loop and closed loop control systems for the person walking on a road.
2. Construct root locus for the open loop T.F function G(s) = (s+2)/(s+1)(s+3).
3. Construct the polar plot for a system having transfer function G(s)=1/s(s+1)(s+2) and find Gain margin and phase margin.
4. Demonstrate about Lead Compensator.
5. Demonstrate the Non homogenous solution for state equation.

6. For the mechanical translation system shown in the figure, find Y2(s)/F(s).

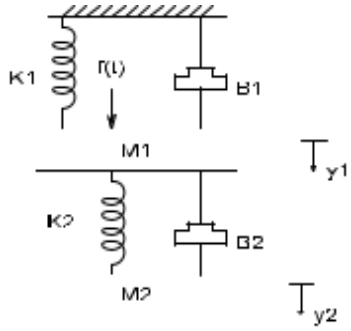

7. Cement is manufactured in large Rotary Kilns where raw lime stone is added and product clinker emerges after high-temperature processes. The clinker is later is cooled and estimated for its quality.The quality of clinker depends on many factors, one of the prime factor being the temperature in the burning zone. This temperature is sensed by an optical pyrometer. The temperature is maintained by manipulating the coal feed rate to the burners. This is accomplished by adjusting the speed of variable –speed coal feed screws. The model of control process is depicted in the figure.
Assume that the transfer function of clinkerization process is 1/(s + 1)(2s + 1) that of the sensor and
coal feed screw is unity. Find the value of K such that system is stable.

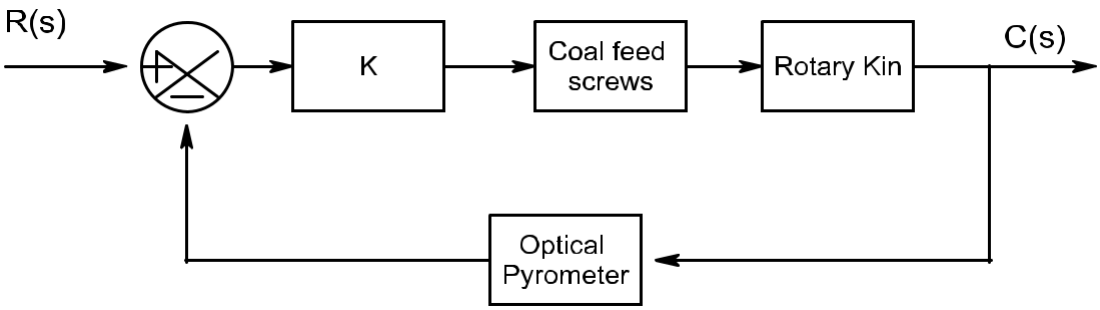

[Open Book Examination Question]

8. A unity feedback system is characterized by an open loop transfer function

$$G(s) = \frac{k}{s\,(s+10)}$$

Find the at least two methods to identify the stability of the system. Which method is more optimum. Justify your answer.
[Open Book Examination Question]

Analyze

1. Resolve C(S)/R(S) using block diagram reduction rules for the given block diagram.

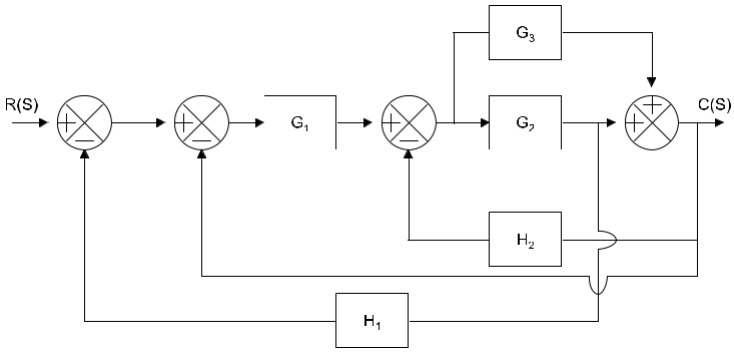

2. Outline the effect of disturbance on the system performance due to feedback.
3. Differentiate the advantage and disadvantages of the root locus and Bode plot.
4. Justify whether the following state space model is state controllable are not.

$$= \begin{bmatrix} -1 & 0 & 0 \\ 0 & -2 & 0 \\ 0 & 0 & -3 \end{bmatrix} B=\begin{bmatrix} 1 & 0 \\ 1 & 2 \\ 2 & 1 \end{bmatrix}$$

5. Outline the state space model in different canonical forms.
6. Outline the following transfer function $C(s)/R(s)=s^2+12s+8/s^3+9s^2+23s+8$ by controllable canonical form.
7. The position of an industrial robot manipulator used for welding in an automobile industry has to be controlled accurately. The position is maintained by a DC servo motor and the feedback is given by optical encoder. The block diagram of the process is given in figure.

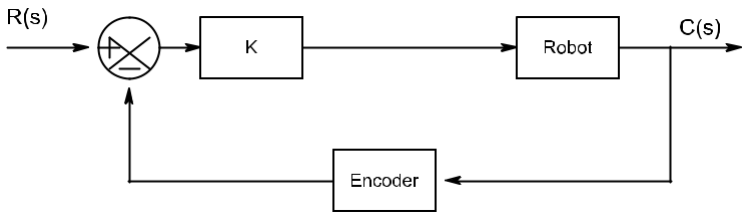

A unity feedback system has transfer function of $G(s) = 4/s(2s + 1)$ and the transfer unction of optical encoder is unity, analyze K value such that settling time is to be less than 0.5 sec and stability.

[Open Book Examination Question]

8. A unity feedback system has an open-loop transfer function of $G(s) = 4/s(2s + 1)$. It is desired to obtain a phase margin of 40o without sacrificing the Kv of the system. Find a suitable network to get the above. Justify your answer. Compute the value of network components.

[Open Book Examination Question]

23CSE02 Object Oriented Programming Lab

0 0 3 1.5

Course Outcomes

1. Make use of JAVA SDK environment to create - debug and run java programs
2. Create applications based on code reusability
3. Develop programs using threads
4. Develop and debug real time problems using exception handling
5. Using IDE, create interactive applications using event handling mechanisms
6. Design Graphical User Interface using AWT components and Swing

COs – POs Mapping

COs	PO_1	PO_2	PO_3	PO_4	PO_5
1	1	3		3	1
2	2	3		3	1
3	3	2		2	1
4	2	2	2	3	1
5	3	2	2	3	2
6	3	2	2	2	2

3 – Strongly linked | 2 – Moderately linked | 1 – Weakly linked

List of Experiments

Students will perform minimum twelve Experiments

Write Java programs to:

1. Demonstrate the basics of Java using classes, methods and objects.
2. Develop a java program that print all real solutions to the quadratic equation ax2+bx+c=0
3. Demonstrate String handling methods.
4. Demonstrate this keyword in different ways
5. Demonstrate the different types of inheritance concept.
6. Demonstrate Inheritance concept using method overriding, super & final keywords and runtime polymorphism
7. Create a java Program to achieve multiple inheritance
8. Implement matrix operations using multidimensional arrays
9. Create a package which has classes and methods to read Student Admission details
10. Extracting tokens using StringTokenizer
11. Handle checked and unchecked exceptions using try-catch, finally, throw and throws keywords
12. Handle user-defined Exceptions
13. Develop a java program for thread Synchronization using by synchronized method and block.
14. Design a Job Application/ Student Admission Form and store the values in a file
15. Handle simple event to display cut/copy/paste events using Swings
16. Emulate the working of a simple Calculator.

List of Augmented Experiments

1. New Patient Registry Management System
2. Restaurant Billing Management System
3. Library Management System
4. ATM Management System
5. Bus Ticket Booking Management System
6. Movie Ticket Booking Management System
7. Queuing Management System
8. Attendance Management System
9. Medical Store Billing Management System
10. Text Editor Projects in Java
11. Google Search Engine Filter
12. Electronic voting System
13. Day Planner
14. Library management System
15. Personal Finance Management System

Reading Material (s)

1. JAVA Lab manual, Department of CSE and IT, GMR

* Students shall opt any one of the Augmented experiment in addition to the regular experiments

23EC405 Analog and Digital Communications Lab

0 0 3 1.5

Course Outcomes

1. Assess the sampling theorem
2. Demonstrate modulation techniques
3. Demonstrate demodulation techniques
4. Implement different Baseband modulation techniques
5. Demonstrate different Digital modulation techniques
6. Contrast the design issues in a digital communication system

COs-POs Mapping

COs	PO_1	PO_2	PO_3	PO_4	PO_5	PSO_2
1	3	2		2		3
2	3	2		2	3	3
3	3	2		2	3	3
4	3	2	2	2		3
5	3	2	2	2		3
6	3	3	2			3

3–Strongly linked | 2–Moderately linked| 1–Weakly linked

List of Experiments
Students will perform minimum twelve Experiments

1. Verification of Sampling Theorem
2. Amplitude Modulation & Demodulation
3. AM-DSB SC -Modulation & Demodulation
4. Design of envelope Detector
5. Frequency Modulation &Demodulation
6. Pulse Amplitude Modulation–Modulation& Demodulation
7. PWM, PPM -Modulation & Demodulation
8. Pre-emphasis & de-emphasis
9. Phase Locked loop(PLL)
10. Verify the operation of Time Division Multiplexing
11. Verification of Delta Modulator
12. Generation and Detection of pulse code modulation
13. Generation and Detection of Differential Pulse Code Modulation
14. Generation and Detection of ASK
15. Generation and Detection of PSK
16. Generation and Detection of of FSK

List of Augumented Experiments*

1. Design of AM receiver
2. Mobile Phone Detector
3. FM Transmitter
4. FM Receiver
5. HAM Radio Receiver

Reading Material(s)

1. Simon Haykin , Digital communications, John Wiley, 4th Edition, 2013
2. H.Taub and D. Schilling, Principles of Communication Systems, TMH, 4th Edition, 2017
3.John G. proakis, Masoundsalehi, Gerhard bakh ,Contempary communication system using MATLAB &Simulink,Thomson India publishers, 2007

* Students shall opt any one of the Augmented experiment in addition to the regular experiments

23ESX01 Employability Skills I

0 0 2 2

Course Outcomes

1. Demonstrate oral communication and writing skills as an individual to present ideas coherently
2. Develop life skills with behavioral etiquettes and personal grooming.
3. Assess analytical and aptitude skills.
4. Develop algorithms for engineering applications.
5. Solve engineering problems using software.
6. Utilize simulation tools for testing.

COs – POs Mapping

COs	PO1	PO2	PO3	PO5	PO8	PO10	PO12
1						3	2
2					1	2	2
3	2	1			2		
4	2		2	2			
5	2		2	2			
6	2		2	2			

3–Strongly linked | 2–Moderately linked| 1–Weakly linked

Unit I

1. Building Confidence

Fear? Steps to Overcoming the Fear of Public Speaking?

Self Esteem: Definition? Types of Self Esteem, Causes of Low Self Esteem, Merits of Positive Self Esteem and Steps to build a positive Self Esteem.

Group Discussions (Practice): GD? GD Vs Debate, Overview of a GD , Skills assessed in a GD, Dos & Don'ts, & Conducting practice sessions (Simple Topics).

Motivational Talk: Team Work: Team Vs Group? Stages in Team Building, Mistakes to avoid and Lessons to Learn (Through Stories or Can be a Case Specific)

8 Hours

2. Quantitative Aptitude

Percentages, Profit and loss, Mixtures and Allegations, Simple Interest, Compound Interest

7 Hours

Unit II

Behavioural Level Modelling

Operations and Assignments, Functional Bifurcation, Procedural constructs: Initial, Always, Assignments with delays, Wait, Multiple always blocks Designs at Behavioural level, Blocking and Non-blocking assignments, Case statement, Simulation flow, Conditional statements, and loops- if, if-else, repeat, for, while, forever, parallel blocks, force-release, Event, System Tasks, and Functions, File based tasks and Functions, Compiler directives, User-Defined Functions, Tasks and Primitives-Introduction, Function, Tasks, User- Defined Primitives (UDP)

Continuous assignment structures, Delays, and Continuous assignments, Assignment to Vectors, Operators,

Practical Components

1. Perform Behavioural model for multiplexer and demultiplexer
2. Perform Behavioural model for 8 to 3 priority encoders
3. Perform Behavioural model for 4-bit counter and shift register
4. Perform the simulation of parity bit generation using functions and tasks
5. Performa two-bit binary addition using functions and tasks
6. Perform the simulation of half adder and display the stimulus, response of system tasks- $monitor,$display,$monitoron, $monitorof, $stop, $finish

15 Hours

Total 30 Hours

23EC501 Linear and Digital IC Applications

3 0 0 3

Course Outcomes

1. Illustrate the characteristics Operational amplifier
2. Illustrate the concept of differential amplifiers
3. Demonstrate the applications of operational amplifier
4. Design various types of active filters
5. Outline the operation and applications of 555 timer and PLL
6. Summarize various ADCs/DACs and logic families

COs – POs Mapping

COs	PO_1	PO_2	PO_3	PO_4	PO_5	PSO_1
1	2	-	-			2
2	2	-	-			2
3	3	2	2			3
4	3	2	2	2	2	3
5	3	2	2	2	2	3
6	3	2	-	2	2	3

3–Strongly linked | 2–Moderately linked| 1–Weakly linked

Unit I

Introduction to Operational Amplifier

Integrated circuits classification, package types, Op-Amp Block diagram, 741 OP-AMP ideal characteristics, DC and AC analysis of dual input balanced output differential amplifier, Properties of other differential amplifier configurations, DC coupling and cascade differential amplifier stages, Constant current Bias circuit, current mirror, Level Translator, DC and AC Op-Amp characteristics, 741 OP-AMP and its features, frequency response of OP-AMP Frequency compensation technique.

Temperature ranges, FET input OP-Amps **13 Hours**

Unit II

Applications of OP-AMPS

Inverting and non-inverting amplifier, adder, subtractor, integrator, differentiator, difference amplifier, instrumentation amplifier, V-I converters, I-V converters , comparators, Schmitt Trigger, Multivibrators, square wave and Triangular wave generators, RC phase shift oscillator, Log and antilog amplifiers.

Buffers, precision rectifiers **11 Hours**

Unit III

Analog filters, 555 Timers and phase locked loop

Introduction, Butterworth filters-first order, second order LPF, HPF filters. Band pass, Band reject and all pass filters, Introduction to 555 Timer, functional diagram, Monostable and Astable operations and applications, Schmitt Trigger, VCO, PLL: Introduction, Block schematic, principles and description of individual blocks,565 PLL .applications of PLL: Frequency multiplication, frequency translation.

AM, FM and FSK demodulators using PLL. **12 Hours**

Unit–IV

D/A & A/D Converters, IC Regulators

Introduction, , Sample & Hold amplifiers, Weighted resistor DAC, R-2R Ladder DAC, Inverted R-2R DAC Parallel comparator type ADC, counter type ADC, successive approximation ADC and Dual slope ADC, IC regulators 78XX, 79XX, LM723,LM317, LM337, introduction to logic families - RTL, DTL, TTL, ECL.

DAC and ADC specifications **12 Hours**

Total: 48 Hours

Textbook (s)

1. Ramakanth A. Gayakwad, Op-Amps & Linear ICs, 3rd edition, PHI, 2002.
2. D. Roy Chowdhury, Linear Integrated Circuits, New Age International (p) Ltd, 2nd Edition, 2003.
3. Venkat Rao K, Rama Sudha K and Manmadharao G, Pulse and Digital Circuits, Pearson Education, 1st edition, 2012.

Reference (s)

1. Sergio Franco, Design with Operational Amplifiers & Analog Integrated Circuits, McGraw Hill, 2001.

2. Donald A Neamen, Electronic circuit analysis and design, Tata McGraw Hill, 2nd edition,2002.
3. R.F.Coughlin & Fredrick Driscoll, Operational Amplifiers & Linear Integrated Circuits, PHI, 6th edition, 2002.

SAMPLE QUESTION (S)

Internal Assessment Pattern

Cognitive Level	Int. Test 1 (%)	Int. Test 2 (%)	Open Book Exam (%)
Remember	10	20	--
Understand	30	30	--
Apply	30	40	60
Analyse		10	40
Evaluate	--	--	--
Create	--	--	--
Total (%)	100	100	100

Remember

1. Define the non-ideal dc characteristics that add error components to the dc output voltage of Op-amp
2. The basic step of 9 bit DAC is 10.3mV. If 000000000 represents 0V, what output is produced if the input is 101101111?
3. List the ideal characteristics of operational amplifier
4. List the limitations of an ordinary Op-amp differentiator
5. List the components to assess the performance of R-2R ladder DAC

Understand

1. Classify differential amplifiers
2. Explain the operation of R-2R ladder DAC
3. Explain about the Op-Amp parameters that should be considered for AC and DC applications
4. Explain the working of a trans conductance amplifier with floating load using Op-amp
5. Compare different types of ADCs

Apply

1. Design a Practical differentiator that will eliminate the limitations of ordinary differentiator using op-amp
2. Design a Practical integrator that will eliminate the limitations of ordinary integrator using op-amp
3. Design a stable multivibrator using IC 555 and also determine its frequency
4. Design a filter to allow the signal frequency up to 2KHz
5. Design a R-2R ladder by using OP-AMP

[Open Book Examination Question]

Analyse

1. Design a Circuit which makes green bulb should be on for 4sec and red bulb should be on for 5sec alternatively by using 555 timer.
2. An Incubator is maintained at a temperature of 28^0c , design a circuit which will identify the variations in the temperature of incubator by using OP-Amp.
3. Design a Circuit to convert digital data streams into analog audio signals and compare which type of conversion DAC produce better results.
4. A differential amplifier has (i) CMRR = 1000 and (ii) CMRR = 10000. The first set of inputs is $v1$ = 100 μV and $v2$ = -100 μV. The second set of inputs is $v1$ = 1100 μV and $v2$ = 900 μV. Find the percentage difference in output voltages obtained for the two sets of input voltage and also comment on this
5. Design a circuit to identify the Male voice and separate the Female voice and convert the voice signal into a digital signal

   [Open Book Examination Question]

23EC502 Microprocessors and Microcontrollers

3 0 2 4

Course Outcomes

1. Assess the architecture and instructions of 8086 microprocessor
2. Demonstrate the application of addressing modes
3. Execute assembly language programs based on 8086 microprocessor
4. Assess the architecture and instructions of 8051 microcontroller
5. Execute assembly language programs based on 8051 microcontroller
6. Implement the interfacing of peripherals with 8051 microcontroller

COs – POs Mapping

COs	PO_1	PO_2	PO_3	PO_4	PO_5	PSO_1
1	2	-	-	-	-	2
2	3	2	2	2	3	3
3	3	2	2	-	3	2
4	2	-	-	-	-	2
5	3	2	2	2	3	3
6	3	2	3	2	3	3

3–Strongly linked | 2–Moderately linked| 1–Weakly linked

Unit I

8086 Microprocessors and Assembly Language Programming

Introduction to microcomputer, evolution of processors and semiconductor memories (RAM, ROM, EPROM, EEPROM), Architecture of 8086 microprocessor, Register organization of 8086, Pipelining concept, Memory segmentation, Addressing Modes.

Instruction Set and Programming: Instruction set of 8086 microprocessor: Data transfer instructions, Arithmetic instructions, Logical Instructions, String instructions, Stack related instructions, Branching instructions, Assembler directives.

Data transfer instructions of 8085 microprocessor, Architecture of 8085 microprocessor

Practical Components

1. Data transfer program using different addressing modes in assembly language programming.
2. Perform arithmetic operations on 8 bit and 16 bit numbers in assembly language programming.
3. Data transfer program using string instruction in assembly language programming.
4. Program for data conversion in assembly language programming.

14+8 Hours

Unit II

8086 Operational Modes and Memory Interfacing

Minimum and Maximum mode operations of 8086 with timing diagrams, Procedures and macros, Stack Structure of 8086, Static RAM Interfacing, Interfacing of 8255 Programmable Peripheral Interface with 8086 microprocessor.

Dynamic RAM, Direct memory access

Practical Components

1. Write assembly language program using procedure.
2. Write assembly language program using macro.
3. Program to reject negative numbers from a series of bytes.

10+6 Hours

Unit III

8051 Microcontroller

Comparison between microprocessor and microcontroller, 8051 family microcontroller, RAM architecture of 8051, Integrated Development Environment (IDE), Pin description of 8051 microcontroller, Machine cycle. Addressing Modes, Instruction set of 8051: Data transfer instructions, Arithmetic instructions, Logical Instructions, Stack related instructions, Branching instructions. Programing and Applications of Timers, Interrupts, Universal Asynchronous Receiver Transmitter (UART).

External memory interfacing with 8051 microcontroller, various constituents of hex file

Practical Components

1. Perform Arithmetic operations on 8bit numbers in assembly language programming using 8051 microcontroller.
2. Program to toggle the LED.
3. Programming and interfacing of traffic light logic.
4. Program to generate square wave using interrupts.

12+8 Hours

Unit IV
Interfacing of 8051 microcontroller with External Peripherals
Interfacing with 8051 microcontroller with: Keypad matrix, LCD, Seven segment displays, L293D Motor driver, Stepper motor, Analog to Digital Converter (804), Digital to Analog Converter (808).
Interfacing of temperature sensor (LM 35) with 8051, interfacing of relay with 8051
Practical Components
1. Programming and interfacing of the key pad matrix.
2. Programming and interfacing of seven-segment display.
3. Programming and interfacing of the LCD.
4. Programming and interfacing of the relay.
5. Programming and interfacing of the dc/Stepper motor.

12+10 Hours
Total: 48+32 Hours

Textbook (s)

1. A.K. Ray & K. M Bhurchandi, Advanced Microprocessors & peripherals, Tata McGraw-Hill, 3rd Edition, 2012
2. Muhammad Ali Mazidi, Janice Gillispie Mazidi and Rolin D. McKinlay, The 8051 Micro controller and Embedded systems: using assembles and C, Pearson, 2nd Edition,2007

Reference (s)
1. D.V.Hall, Microprocessor and Interfacing, Tata McGraw Hill Publishing Company, 2nd Edition 2006
2. N. Sentil Kumar, M Sarvanan, S Jeevananthan, Microprocessors and Microcontrollers, Oxford University Press, 1st Edition, 2010
3. Kenneth J Ayala, The 8051 Microcontroller Architecture, Programming and Applications, Thomson Publishers, 3rd Edition, 2004

SAMPLE QUESTION (S)
Internal Assessment Pattern

Cognitive Level	Int. Test 1 (%)	Int. Test 2 (%)	Lab Examination (%)
Remember	25	25	--
Understand	35	35	--
Apply	40	40	100
Analyze	--	--	--
Evaluate	--	--	--
Create	--	--	--
Total (%)	100	100	100

Remember

1. List out any four sixteen bit registers of 8086 microprocessor which can't split into two eight bit registers.
2. State the advantages of memory segmentation.
3. State the significance of Reset pin of 8051 microcontroller.
4. List four differences between 8051 family of microcontroller.

Understand

1. Calculate the physical address generated by the 8086 microprocessor to fetch the code if CS = A40H & IP = AAAAH.
2. Explain the function of BIU and EU of 8086 microprocessor.
3. Explain the consequences of execution of MOV IP, #14H instruction of 8051 microcontroller.
4. Explain the structure of internal RAM of 8051 microcontroller.
5. Explain the significance of each bit of TMOD register of 8051 microcontroller.

Apply

1. Write a program for 8051 microcontroller in assembly language to generate a square wave of 10KHz from pin P2.1. Assuming frequency of crystal attached to the microcontroller is 12MHz.
2. Develop a program in assembly language for 8051 microcontroller using interrupt to generate a 10KHz square wave from pin P2.0 and 25KHz square wave from pin P2.1 of 8051 microcontroller. Make suitable assumptions.
3. Interface a seven-segment display with 8051 microcontroller and develop a program in assembly language to display even numbers from 0 to 9.
4. Interface a LCD with 8051 microcontroller and develop a program in assembly language to display a message in 1st row of LCD.

23EC503 VLSI Design

Course Outcomes **3 0 2 4**

1. Explain the basic MOSFET circuits operation and MOS fabrication Process
2. Implement the layout diagrams for CMOS circuits
3. Assess the effects of parasitics and Scaling of MOS circuits
4. Interpret the operation of basic analog and digital MOSFET circuits
5. Implement the Digital and Analog circuits with Full-custom and Semi-custom design flows.
6. Interpret the VLSI implementation flows and the basics of VLSI testing

COs – POs Mapping

COs	PO_1	PO_2	PO_3	PO_4	PO_5	PSO_1
1	2	-	-	2	3	2
2	3	2	2	2	3	3
3	3	2	2	2	3	3
4	2	-	-	2	3	2
5	3	2	2	2	3	3
6	2	-	-	2	3	2

3–Strongly linked | 2–Moderately linked | 1–Weakly linked

Unit I

Introduction and basic electrical properties of MOS circuits: Introduction to VLSI Design Flow, Introduction to IC technology, I_{ds} versus V_{ds} Relationships, Aspects of MOS transistor Threshold Voltage, MOS transistor conductance, Output Conductance and Figure of Merit. Fabrication process: nMOS, pMOS and CMOS. Alternate pull up forms in inverter circuits, Pull-up to Pull-down Ratio for nMOS inverter driven by another nMOS inverter, basic current mirror, CMOS Inverter, Latch-up in CMOS circuits.

Static power dissipation, Dynamic Power dissipation in CMOS circuits

Practical components

1. Simulation of nMOS inverter
2. Functional verification of CMOS inverter
3. Functional verification of AND gate using pass transistor
4. Perform the simulation of the basic current mirror

13+8 Hours

Unit II

Basics of VLSI: Driving large capacitive loads, Cascaded CMOS inverters for delay optimization, Wiring Capacitances, Stick Diagrams, Design Rules and Layout, Layout Diagrams for MOS circuits, Sheet resistance, Gate capacitance, The Delay Unit, Inverter Delays, Scaling models and scaling factors, Scaling factors for device parameters, Limitations of scaling: performance improvement by CMOS scaling.

Drain Induced Barrier Lowering (DIBL) effect, Sub threshold conduction

Practical components

1. Layout design of CMOS inverter
2. Perform the DRC and LVS for the CMOS inverter Layout
3. Perform the RC extraction for CMOS inverter
4. Compute the delay of CMOS inverter after the RC extraction **11+8 Hours**

Unit III

Basic Digital and Analog Circuits: Static CMOS logic, Cascode Voltage Switch Logic, Transmission Gates, Pass Transistor Logic, Dynamic logic, Domino logic, Metastability, setup time, hold time, Small signal Modeling of transistor, body bias effect, biasing styles of MOSFET FET amplifiers, single stage amplifier with resistive load, Common Source amplifier, Common Drain amplifier, Common Gate amplifier.

CMOS full adder, Clocked CMOS registers

Practical components

1. Design and simulation of Half adder using transmission gate logic
2. Simulate a one transistor Common Source amplifier with resistive load
3. Design and simulation of Half adder using pass transistor
4. Simulate a one-transistor common drain amplifier

12+8 Hours

Unit IV

VLSI Implementation Strategies and Testing:

Introduction, ASIC Design flow, types of ASICs- Full custom, Standard cell based Asics, Gate array based

ASICs, FPGAs, FPGA design flow, Basic FPGA Design Structure FPGA Programming Technologies: SRAM, EPROM, EEPROM; Introduction to testing, Manufacturing test principles, Design for testability (DFT) - Adhoc testing, Scan design, Built in self-test (BIST)
Xilinx3000Series, Boundary scan

Practical components

1. Design and ASIC Implementation of 4:1 MUX
2. Design and FPGA Implementation of 2:4 Decoder
3. Design and FPGA Implementation of a D-Latch
4. Perform the ASIC implementation of a 4-bit counter

12+8 Hours
Total: 48+32 Hours

Textbooks:

1. Kamran Eshraghian, Douglas ,A. Pucknell And Sholeh Eshraghian, Essentials of VLSI Circuits and Systems, , Prentice-Hall of India Private Limited, 2005 Edition.
2. Behzad Razavi, Design of Analog CMOS Integrated Circuits, McGraw Hill, 2003
3. Jan M. Rabaey, Anantha Chandrakasan and Borivoje Nikolic, Digital Integrated Circuits, Pearson Education, 2nd edition,2016.
4. Weste and Eshraghian, Principles of CMOS VLSI Design, Pearson Education, 3rdEdition, 1999
5. Michael john Sebastian smith, Application specification integrated circuits, Addition Wesley,1st edition,1997

References:

1. John P. Uyemura, ,Introduction to VLSI Circuits and Systems, John Wiley & Sons, reprint 2009.
2. Vinod Kumar Khanna, Integrated Nanoelectronics: Nanoscale CMOS, Post-CMOS and Allied Nanotechnologies, Springer India, 1st edition, 2016.
3. Michael John Sebastian Smith, Application Specific Integrated Circuits, Addison-Wesley, 1997.

SAMPLE QUESTION (S)
Internal Assessment Pattern

Cognitive Level	Int Test 1 (%)	Int Test 2 (%)	Lab Examination(%)
Remember	35	20	--
Understand	40	30	--
Apply	25	50	100
Analyze	--	--	
Evaluate	--	--	--
Create	--	--	--
Total %	100	100	100

Remember

1. What are the scaling models?
2. Why switch logic is better than pass transistor logic?
3. Show that pull up to pull down ratio of an nMOS inverter driven by another nMOS inverter is
4. How the delay varies with number of inputs for different fabrication processes?
5. Show that 11 is the best test vector for AND gate if there is a SA0 fault on one node

Understand

1. Explain briefly about nMOS pass transistor
2. Compare Stick diagram and Layout
3. Explain about λ based design rules in detail
4. Classify possible wiring capacitances in VLSI fabrication process
5. Explain about architecture of FPGA.

Apply

1.Construct CMOS inverter having pull up to pull down ratio of 1:1 if n channel sheet resistance is 10kΩ and p channel sheet resistance is 25kΩ
2. Construct layout for 2-input NAND gate
3. Show the architecture of FPGA with neat sketch
4. Demonstrate your answer , If the disturbance is created at the output then there exist low resistance path between supply rails of CMOS inverter, is that disturbance creates problem in the CMOS inverter,
5. Construct Enhancement load and depletion load nMOS inverters

23EC504 Antennas and Microwave Engineering

3 0 0 3

Course Outcomes

1. Illustrate parameters of an antenna and antenna arrays
2. Implement antenna arrays
3. Design an antenna for given specifications
4. Justify modes of rectangular waveguide and the S-parameters of waveguide components
5. Summarize operation of microwave tubes
6. Interpret microwave measurements

COs – POs Mapping

COs	PO_1	PO_2	PO_3	PSO_2
1	2	-	-	2
2	3	2	-	3
3	3	2	2	3
4	3	2	-	3
5	2	-	-	2
6	2	-	2	2

3–Strongly linked | 2–Moderately linked| 1–Weakly linked

Unit I

Antenna Fundamentals & Uniform Linear Arrays

Radiation Mechanism: Single wire, Two wire, Dipoles, Current Distribution on a thin wire antenna, Antenna Parameters: Radiation Patterns, Patterns in Principal Planes, Main Lobe and Side Lobes, Beam width, Beam Area, Bandwidth, input impedance, Radiation Intensity, Beam Efficiency, Directivity, Gain, Antenna Apertures, Antenna efficiency, Antenna regions, Friis Transmission equation.

Antenna arrays: Different cases of 2 element arrays, Principle of Pattern Multiplication, N element Uniform Linear Arrays: Broadside and End fire Arrays. Introduction to LiDar.

Binomial array and it's applications **13 Hours**

Unit II

Arrays with Parasitic Elements and Special Antennas

Arrays with Parasitic Elements: Yagi Uda Arrays, Folded Dipoles & their characteristics, Paraboloidal Reflectors: Geometry, characteristics, types of feeds, F/D Ratio, Spill Over, Back Lobes, Aperture Blocking, Off-set Feeds and Cassegrain Feeds.

Helical Antennas: Significance, Geometry, basic properties, Design considerations for monofilar helical antennas in Axial Mode and Normal Modes (Qualitative Treatment), Horn Antennas - Types, Optimum Horns, Design Characteristics of Pyramidal Horns, Design of Rectangular and Circular Microstrip Patch antenna, Log Periodic antennas - Introduction, Planar wire surfaces.

Applications of microstrip patch antenna and Lens antennas **11 Hours**

Unit III

Waveguides and Wave Guide Components

Introduction: Microwave Spectrum, advantages and applications of microwaves, Rectangular waveguides-TE/TM mode analysis, Expressions for Fields, Characteristic Equation and Cut-off Frequencies, Dominant and Degenerate Modes, Mode Characteristics: Phase and Group Velocities.

Scattering Matrix: Significance, Properties, S Matrix Calculations for multi-port Junctions - E plane and H plane Tees, Magic Tee, Directional Coupler, Faraday rotation devices- Gyrator, Isolator, Circulator.

Hybrid Rings and rat race junction **14 Hours**

Unit IV

Microwave Tubes and Microwave Measurements

Limitations and Losses of conventional tubes at microwave frequencies, Two Cavity Klystron - Velocity Modulation and Applegate Diagram, Bunching Process. Reflex Klystron - Applegate Diagram and Principle of working, Magnetron - 8-Cavity Cylindrical Travelling Wave Magnetron.

Microwave Bench- Different Blocks and their Features, Precautions, Microwave Power Measurement: Bolometer Method, Measurement of Attenuation, Frequency, VSWR, Impedance Measurement.

Applications Gunn Diode and Impatt diode **10 Hours**

Total: 48 Hour

Textbook (s)

1. C.A Balanis, Antenna Theory, John Wiley & Sons, 3rd Edition. 2016
2. John D Krauss, Ronald J Marhefka, Ahmad S Khan, Antennas for all applications, Tata McGraw-Hill, 3rd Edition, 2009
3. K. D. Prasad, Antennas & Wave Propagation, Satya Prakashan, New Delhi, 3rd Edition, 2011
4. Samuel Y. Liao, Microwave Devices and Circuits, Pearson education, 3rd Edition, 2007
5. Pozar, Microwave Engineering, Wiley publishers, 4th Edition, 2012

Reference (s)

1. E.C. Jordan and K.G. Balmain, Electromagnetic Waves and Radiating Systems, PHI, 2nd Edition, 2011
2. John D Kraus, Antennas, Tata McGraw-Hill, 2nd Edition, 2001
3. R.E. Collin, Foundations for Microwave Engineering, IEEE Press, John Wiley, 2nd Edition, 2000
4. M. Kulkarni, Microwave and Radar Engineering , Umesh Publications, 4 th Edition, 2010

SAMPLE QUESTION (S)

Internal Assessment Pattern

Cognitive Level	Int. Test 1 (%)	Int. Test 2 (%)	Open Book Exam (%)
Remember	40	40	--
Understand	30	30	--
Apply	30	30	60
Analyse	--		40
Evaluate	--	--	--
Create	--	--	--
Total (%)	100	100	100

Remember

1. Define directivity and gain of an antenna.
2. List out the different antennas under use
3. State any two differences between broad side array and end fire array
4. Define dominant mode
5. Define degenerate mode

Understand

1. Explain directivity in terms of radiation intensity and power density.
2. Explain radiation mechanism of two wire.
3. Compare TE and TM modes of a wave guide.
4. Identify the conditions of occurrence of degenerating modes.
5. Compare the E-plane Tee and H-plane Tee in any four aspects.

Apply

1. Design a rectangular patch antenna which should be operated at a frequency of 10 GHz with a radius of 3 inchs for an FR4 substrate material.
2. Show that TE10 mode is the dominant mode in rectangular waveguide.

[Open Book Examination Questions]
Apply

1. The input power in a two hole directional coupler is 1mW. The coupler has a coupling factor of 15 dB and a directivity of 30 dB. Compute the power in all the ports.
2. Design a uniform linear broadside antenna array of N elements placed along the z- axis with a uniform spacing d=1/10 between the elements. Determine the closest integer number of elements so thst in the elevation plane:
   (a) the half-power beam width of the array factor is approximately 60^0

(b) the first-null beam width of the array factor is 60^0

Analyse

1. Justify that it is impossible to construct a perfectly matched, lossless, reciprocal three port junction.
2. Two lossless X-band (8.2–12.4 GHz) horn antennas are separated by a distance of 100λ. The reflection coefficients at the terminals of the transmitting and receiving antennas are 0.1 and 0.2, respectively. The maximum directivities of the transmitting and receiving antennas (over isotropic) are 16 dB and 20 dB, respectively. Assuming that the input power in the lossless transmission line connected to the transmitting antenna is 2W, and the antennas are aligned for maximum radiation between them and are polarization-matched, find the power delivered to the load of the receiver.

23ECC11 RTL Coding Techniques

3 0 0 3

Course Outcomes:

1. Interpret the RTL design guidelines and synthesis of procedural blocks
2. Illustrate the Verilog RTL coding techniques
3. Use the RTL design techniques in HDL coding of digital circuits
4. Demonstrate the RTL design techniques for the implementation of sequential and combinational blocks
5. Perform the RTL coding at block level for a digital system architecture
6. Interpret the control path and data path for complex digital circuits

COs – POs Mapping

COs	PO_1	PO_2	PO_3	PO_4	PSO_1
1	2	-	-		2
2	2	-	-		2
3	3	2	2		3
4	3	2	2	2	3
5	3	2	2	2	3
6	3	2	2	2	3

3–Strongly linked | 2–Moderately linked| 1–Weakly linked

Unit I
RTL Coding Techniques-I
Introduction to Verilog & Modelling Styles, RTL Design Guidelines, Parallel Versus Priority Logic, Blocking Assignments and Event Queue, Blocking Assignments and multiple "always" blocks, Blocking Assignments in the same "always" block, ordering of non-blocking assignments, Continuous versus Procedural Assignments, Combinational Loops in Design.
RTL code for Subtraction using 2's complement, ALU

12 Hours

Unit II
RTL Coding Techniques-II
Sequential statements - 'case' with missing 'default', 'if-else' with missing 'else', Logical Equality versus Case Equality, Incomplete Sensitivity List, Unintentional Latches in the Design, if-else versus case statements, Arithmetic Resource Sharing, Asynchronous Reset D flip-flop, Synchronous Reset D flip-flops, Gated Clocks, Clock Enables
RTL code for 2 to 4 decoder using conditional statement, Synthesize the RTL for 4 to 1 Mux missing else

12 Hours

Unit III
RTL Coding Practice
State Machines and Optimization, Moore Machine, Mealy Machine, Sequence Detectors using FSM's, Design without Pipelining, Design with Pipelining, Synchronous Counters: Up-Down Counter, Ring Counter, Johnson Counter, Asynchronous Counter: Ripple Counter; Structured design of nibble adder, Multiplexer, Decoder
RTL code for the encoder, decoder, shift registers

12 Hours

Unit IV
RTL Coding for Digital Architectures
Tri-State Bus, Bus Arbitration, Static Arbitration, Bidirectional Data Transfer, RTL design for, Single-Port RAM, Dual-Port RAM, RTL design for Serial adder: Control path and Data path
SDRAM Memory Controller, DDR Memory Controller

12 Hours

Total: 48 Hours

Textbook (s)

1. Vaibbhav Taraate, Advanced HDL Synthesis and SOC Prototyping (RTL Design Using Verilog), Springer Nature Singapore Pte Ltd., 2019
2. Vaibbhav Taraate, Digital Logic Design Using Verilog Coding and RTL Synthesis, Springer Nature

Singapore Pte Ltd., 2016
1. J Bhasker, A Verilog HDL Primer, Star Galaxy Publishing, 3rd Edition, 2018

Reference (s)

1. Michael D. Ciletti, Advanced Digital Design with the Verilog, Prentice-Hall of India Private limited, 2nd Edition, 2005

SAMPLE QUESTION (S)

Internal Assessment Pattern

Cognitive Level	Int. Test 1 (%)	Int. Test 2 (%)	Open Book Exam (%)
Remember	20	20	--
Understand	55	40	--
Apply	25	40	60
Analyse	--	--	40
Evaluate	--	--	--
Create	--	--	--
Total (%)	100	100	100

Remember

1. Define Verilog module structure
2. List out any two sequential statements with syntax
3. List out any four Verilog operators
4. List out any three modelling styles of Verilog HDL
5. State the procedural constructs in Verilog
6. Define static arbitration

Understand

1. Illustrate the concept of case statement
2. Interpret the concept of if – else statement
3. Compare Moore and Mealy machines
4. Explain the concept of Arithmetic Resource Sharing an example
5. Explain Gated Clocks with suitable example
6. Compare asynchronous reset and synchronous reset D flip-flops

Apply

1. Construct Verilog HDL for 4 to 1 multiplexer
2. Design 4-bit parallel adder using full adders
3. Design 2-input OR gate using multiplexer
4. Construct Verilog HDL for one bit comparator
5. Construct the RTL design to implement FIFO memory buffer
6. Construct the RTL design to implement digital circuit (with minimum gates and flip flops) that could control a coin operated vending machine to dispenses a candy under following conditions:
   (a) The machine accepts only Rs. 5 coin and other than Rs. 5 coin it should not accept.
   (b) It takes Rs. 15 for a piece of candy to be released from the machine
      i. Develop a state table and state diagram.
      ii. Draw the architecture in terms of control path and data path.
      iii. Construct the RTL to implement the above architecture.

[Open Book Examination Question]

Analyze

1. Compare blocking and non-blocking assignments
2. Differentiate continuous assignment and procedural assignment statements with an example
3. Resolve the concept of with and without pipelining

4. Compare the gate level implementation of D flip-flop
5. Compare initial and always constructs in Verilog HDL
6. Integrate a simplified traffic-light controller that switches traffic lights on a crossing where a north-south (NS) street intersects an east-west (EW) street. The input to the controller is the WALK button pushed by pedestrians who want to cross the street. The outputs are two signals NS and EW that control the traffic lights in NS and EW directions. When NS or EW is 0, the red light is on and when they are 1, the green light is on. When there are no pedestrians, NS=0 and EW=1 for 1 minute, followed by NS=1 and EW=0 for 1 minute and so on. When a WALK button is pushed, NS and EW both come 1 for a minute when the present minute expires. After that the NS and EW signals continue alternating. For the traffic-light controller:
    i. Develop a state table and state diagram.
    ii. Draw the architecture in terms of control path and data path
    iii. Construct the RTL to implement the above architecture

[Open Book Examination Question]

23ECC21 IoT Architectures and Protocols

3 0 0 3

Course Outcomes

1. Illustrate IoT framework and architecture of IoT/M2M
2. Assess the wired and wireless communication protocols for IoT/M2M applications
3. Summarize light weight IoT/M2M protocols and addressing schemes
4. Assess the sensor and actuator technology for IoT/M2M applications
5. Demonstrate the development boards for IoT/M2M applications
6. Summarize the cloud architecture and case studies of IoT applications

COs – POs Mapping

COs	PO_1	PO_2	PO_3	PO_6	PO_7	PO_8	PSO_1	PSO_2
1	3	-	2	-		2	2	2
2	3	2	2	2	2	2	2	2
3	3	2	2	2	2	2	2	2
4	3	2	2	2		-	2	2
5	3	-	2	-		2	2	2
6	3	-	2	2	3	2	2	2

3–Strongly linked | 2–Moderately linked| 1–Weakly linked

Unit I

Overview of IoT

Introduction to OSI, TCP/IP Reference models, Overview of Internet of Things, IoT Conceptual Framework - Oracle, IBM and CISCO.

Introduction to M2M, IoT design standards (IETF, ITU-T,ETSI and OGC), Modified OSI model for the IoT/M2M systems proposed by IETF and ITU-T, Data Enrichment, Data Consolidation and Device Management at Gateway

HTTP & HTTPS, FTP

12 Hours

Unit II

Communication Technologies and IoT Protocols

Wireless communication technologies (Zigbee and Bluetooth/BLE), Wired communication technologies (SPI and I2C), Constrained Applications Protocol (CoAP), Message Queue Telemetry Transport protocol (MQTT), 6LowPAN protocol, LoRaWAN protocol, IP Addressing in the IoT (IPv4 and IPv4), Media Access Control address.

UART, Bluetooth

12 Hours

Unit III

Sensors, Actuators and Development Boards

Sensing the real world for IoT applications, temperature sensor, humidity and temperature sensor, light sensor, touch sensor, smoke detector, rain detector, ultrasonic sensor, soil moisture sensor, RFID, Actuators: Solenoid valve, DC motor, stepper motor, Relay, Development Boards: Arduino board, Node MCU, Raspberry pi

Optical sensor, L293D Motor driver

12 Hours

Unit IV

IoT web Services and Applications

Cloud platforms for IOT, virtualization concepts and cloud architecture, cloud computing, benefits, cloud services - SaaS, PaaS, IaaS, cloud providers & offerings, IoT Applications: Smart Home, Smart City, Precision Agriculture, health care

IoT for smart grid, IIoT

12 Hours

Total: 48 Hours

Textbook (s)

1. Raj Kamal, "Internet of Things: Architecture and Design Principles". TMH Publications, 2017.
2. Yogesh Misra, Programming and Interfacing with Arduino, CRC Press, 1st Edition, 2021

Reference (s)

1. Vijay Madisetti and Arshdeep Bahga, "Internet of Things (A Hands-on-Approach)", 1st Edition, VPT, 2014
2. Behrouz A. Forouzan, Data Communications and Networking, 5thEdition, Tata McGraw Hill Higher Education, 2013
3. Boyle, From Machine-to-Machine to the Internet of Things: Introduction to a New Age of Intelligence, 1st Edition, Academic Press, 2014.2M Communications, ISBN: 978-1-118-47347-

23ECC31 Coding Theory and Techniques

3 0 0 3

Course Outcomes

1. Illustrate the principles of source coding, BSC and BEC
2. Construct the linear block codes for error correction and detection
3. Construct the cyclic codes for error correction and detection
4. Illustrate the convolutional encoding and decoding process
5. Assess the performance of ARQ protocols
6. Demonstrate the cryptographic techniques and security principles

COs – POs Mapping

COs	PO_1	PO_2	PO_3	PO_4	PSO_2
1	2	2			2
2	3	2	2		3
3	3	2	2		3
4	2	2		2	2
5	3	2	2	2	3
6	3	2	2	2	3

3–Strongly linked | 2–Moderately linked| 1–Weakly linked

Unit I

Source Coding

Introduction to source coding, Instantaneous codes, Kraft's inequality, coding efficiency and redundancy, source coding theorem, construction of basic source codes, Shannon Fano coding, Huffman coding, Lempel-Ziv Coding, Channel coding theorem for Discrete memoryless channel, Binary Symmetric Channel, Binary Erasure Channel. **12 Hours**

Rate-distortion function, Quantization

Unit II

Linear Block Codes

Codes for error detection and correction: Parity check coding, Hamming codes, Linear block codes, Error detecting and correcting capabilities, Generator and Parity check matrices, Standard array and Syndrome decoding, Cyclic codes: Generator polynomial, encoding of cyclic codes, Syndrome decoding of cyclic codes. **12 Hours**

RS Codes, LDPC codes

Unit III

Convolutional Codes and ARQ Protocols

Encoding and state Tree and Trellis diagrams, Maximum likelihood decoding of convolutional codes, Viterbi algorithm, Automatic repeat request (ARQ), Performance of ARQ, Probability of error and throughput, Applications: Concatenated Codes, Interleavers, Compact Disc, Codes for Magnetic recording. **12 Hours**

Turbo codes, Hybrid ARQ

Unit IV

Advanced Coding Techniques

Turbo Codes: Types of Turbo Codes, Structure and Encoding of Turbo Codes, Interleaver Design, Iterative Decoding of Turbo Codes.

LDPC Codes: Introduction to LDPC Codes, Structure and Graph Representation, LDPC Code Construction and Encoding, LDPC Code Decoding Algorithm-Belief Propagation (Sum-Product Algorithm)

Hybrid Turbo Codes, Spatially coupled LDPC codes **12 Hours**

Total: 48 Hours

Textbook (s)

1. Bernard Sklar, Digital communications: Fundamentals and applications, 2nd edition, Prentice Hall, 2008.
2. R Bose, Information Theory Coding and Cryptography, 2nd edition, McGraw-Hill, 2017.

Reference (s)

1. John G. Proakis, Digital Communication, 5th edition, McGraw Hill, 2014.
2. William Stallings, Cryptography and Network Security: Principles and Practices, 7th edition, Pearson education, 2019.
3. R.P. Singh, SP Sapre, Communication Systems, 3rd edition, McGraw Hill, 2017.

23IT304 Database Management Systems

3 0 0 3

Course Outcomes

1. Understand the fundamental concepts of database and Various data models
2. Explain the use of Relational Algebra and integrity constraints for Query execution
3. Use SQL Commands to handle the database
4. Apply Normalization for schema refinement
5. Make use of concept of transaction management, recovery and serializability in databases
6. Outline Indexing concepts, different types of data

CO–PO Mapping

COs	PO1	PO2	PO3	PO12	PSO2
1	3	1	1	1	1
2	3	2	3	2	2
3	3	3	3	2	2
4	3	3	3	1	1
5	3	2	3	2	2
6	2	1	2	2	2

3–Strongly linked | 2–Moderately linked | 1–Weakly linked

Unit I **12 Hours**

Introduction to DBMS and ERModel

DBMS Vs. File System, instance and schema, Data abstraction, Data independence, database users and database administrator, Database system structure, Introduction to Data Models (E-R Model, Relational Model, Hierarchical Model, Network Model, Object Oriented Data Model), Database Design Process, Entities, Attributes, Entity Sets, Relationships, Relationship Sets, Additional features of ER Model.

Applications of DBMS, Object Relational Data Model

Unit II **12 Hours**

Introduction to Relational Model and Basic SQLQueries

Relational Algebra Operations: Selection, Projection, Rename, Set Operators, Joins, Division, Examples of Relational Algebra Queries, Relational Calculus: Tuple Relational Calculus. Integrity Constraints over Relations, Introduction to Views. SQL Queries: Basic Structure, Set Operations, Aggregate Functions, Null values, Sub Queries, Group By And Having Clauses, OuterJoins.

Domain Relational Calculus, Query Optimization

Unit III **12 Hours**

Normalization and Transaction Management

Introduction To Schema Refinement - Problems Caused By Redundancy - Decomposition - Problems Related To Decomposition - Functional Dependency - Closure of a Set of Fds - Attribute Closure - First - Second - Third Normal Forms – BCNF - Multi Valued Dependencies – Fourth Normal Form, Join Dependency, Fifth Normal Form. Transactions: Acid Properties of Transaction - Transaction States - Schedule: Serial Schedule - Concurrent Schedules - Anomalies Associated with Concurrent Schedules (RW - WR - and WW Conflicts) - Serializability - Conflict Serializability - and View Serializability.

EF Codd Rules, Domain Dependency

Unit IV **12 Hours**

Locking, Recovery Systems, Indexing, Different Types of Data

Introduction to Lock Management-Lock Based Concurrency Control: 2pl-Strict 2pl-Concurrency without Locking: Timestamp–Based Concurrency Control, Optimistic Concurrency Control. Introduction to Aries - the Log - the Write-Ahead Log Protocol-Check Pointing Indexing: Types of Single-Level Ordered Indexes, Multilevel Indexes Different Types of Data: Structured, Semi-Structured and Unstructured Data

Heap File, Hash File Organizations

Total: 48 Hours

Textbook (s)

1. Elmasri&Navatha, Fundamentals of Database Systems, Pearson Education, 7thEdition,2016
2. SilberschatzKorth, Database System Concepts, McGraw hill, 7thEdition,2020

Reference (s)

1. SorayaSedkaoui, Data Analytics and Big Data, Wiley, 1st Edition,2018.
2. PeterRob&CarlosCoronel, Database Systems design, Implementation and Management, 9thEdition, 2010.
3. Raghurama Krishnan & Johannes Gehrke, Database Management Systems, TATA McGraw-Hill, 3rd Edition,2003
4. C.J.Date, An Introduction to Database Systems, Pearson Education, 8thEdition,2006

Internal Assessment Pattern

Cognitive Level	Int. Test 1(%)	Int. Test 2 (%)	Assignment Test/OBE (%)
Remember	40	40	--
Understand	30	40	--
Apply	30	20	50
Analyze	--	--	50
Evaluate	--	--	--
Create	--	--	--
Total (%)	100	100	100

SAMPLE QUESTION (S)

Remember

1. List any four application of DBMS
2. Define data model
3. List any four applications for triggers
4. Define functional dependency
5. List the 4 properties of Transaction

Understand

1. Explain E-R Model with suitable example
2. Explain the role of integrity constraints in database design
3. Illustrate the working principle of 'write a head log'protocol
4. Differentiate 3NF and4NF
5. Explain Two Phase Locking Protocol

Apply

1. When multiple transactions are being executed by the operating system in a multiprogramming environment, there are possibilities that instructions of one transaction are interleaved with some other transaction. Apply the suitable concept to overcome the problem
2. Classify various normal forms according to their applicability
3. Give some real-world applications of Normalization
4. Illustrate the Commit and Rollback operations of Transaction Control
5. Give some real-world applications for Database indexing techniques

Analyze

1. Compare File processing system with DBMS
2. Analyze different locking protocol for concurrency control and serializability
3. Normalization will increase the complexity of the database design. Justify
4. Compare DDL and DML of SQL
5. Compare and Contrast Serializability and Recoverability

Evaluate

1. Is database redesign is necessary? explain
2. How can you evaluate the performance of two data models?
3. Evaluate the performance of query processor and list the corresponding metrics
4. How can you assess the throughput and delay for any DBMS?
5. How can you evaluate the impact of data models on the query processing?

Open Book Exam Questions

Question 1:

Anitha has a large CD collection. Her friends like to borrow her CD's, and she has to keep track of who has what. She maintains a list of friends, identified by unique FID's and a list of CD's, identified by CID's. With each friend are the name and telephone numbers which she can call to get the CD back. With each CD is actor name and title. Whenever a friend borrows a CD, She will enter that fact into her database along with the date borrowed. Whenever the CD gets returned, that fact, too, gets noted along with the date returned. Anitha wants to keep a complete history of her friends' borrowing habits so that she can ask favors of the heavy borrowers.
Draw an ER diagram to figure out the above situation and identify types of attributes and cardinality. Represent this database as a collection of 3NF relational tables.

Question 2:

The relational scheme R(A,B,C,D,E,F) and set of functional dependencies AB -> D, E -> C, AF -> B. From this, find out all super keys for this relation, and which of these super keys form akey.

23CS201 Data Structures

3 0 0 3

Course Outcomes

At the end of the course, Student will be able to

1. Explain the role of linear data structures in organizing and accessing data efficiently in algorithms.
2. Design, implement, and apply linked lists for dynamic data storage, demonstrating understanding of memory allocation.
3. Develop programs using stacks to handle recursive algorithms, manage program states, and solve related problems.
4. Apply queue-based algorithms for efficient task scheduling and breadth-first traversal in graphs and distinguish between deques and priority queues, and apply them appropriately to solve data management challenges.
5. Devise novel solutions to small scale programming challenges involving data structures such as stacks, queues, Trees
6. Recognize scenarios where hashing is advantageous, and design hash-based solutions for specific problems.

CO-PO Mapping

COs	PO1	PO2	PO3	PO12	PSO1
1	3	2	2	1	3
2	3	3	3	1	3
3	3	3	3	1	3
4	3	3	3	1	3
5	3	3	3	1	3
6	2	3	3	1	3

3–Strongly linked | 2–Moderately linked | 1–Weakly linked

Unit I

Introduction to Linear Data Structures: Definition and importance of linear data structures, Abstract data types (ADTs) and their implementation, Overview of time and space complexity analysis for linear data structures. **Searching Techniques**: Linear & Binary Search, **Sorting Techniques**: Bubble sort, Selection sort, Insertion Sort

11Hours

Unit II

Linked Lists and Stacks: Singly linked lists, representation and operations, doubly linked lists and circular linked lists, Comparing arrays and linked lists, Applications of linked lists. **Stacks**: Introduction to stacks: properties and operations, implementing stacks using arrays and linked lists,

13 Hours

Unit III

Queues: Introduction to queues: properties and operations, implementing queues using arrays and linked lists. Deques: Introduction to deques (double-ended queues), Operations on deques and their applications**.** **Applications of Stack and Queue:** Applications of stacks in expression evaluation, backtracking, reversing list etc., Applications of queues in breadth-first search, scheduling, etc.

12 Hours

Unit IV

Trees: Introduction to Trees, Binary Search Tree – Insertion, Deletion & Traversals Hashing: Brief introduction to hashing and hash functions, Collision resolution techniques: chaining and open addressing, Hash tables: basic implementation and operations, Applications of hashing in unique identifier generation, caching, etc.

12 Hours

Total: 48 Hours

Textbooks:

1. Data Structures and algorithm analysis in C, Mark Allen Weiss, Pearson, 2nd Edition.
2. Fundamentals of data structures in C, Ellis Horowitz, Sartaj Sahni, Susan Anderson-Freed, Silicon Press, 2008

Reference Books:

1. Algorithms and Data Structures: The Basic Toolbox by Kurt Mehlhorn and Peter Sanders
2. C Data Structures and Algorithms by Alfred V. Aho, Jeffrey D. Ullman, and John E. Hopcroft
3. Problem Solving with Algorithms and Data Structures" by Brad Miller and David Ranum
4. Introduction to Algorithms by Thomas H. Cormen, Charles E. Leiserson, Ronald L. Rivest, and Clifford Stein
5. Algorithms in C, Parts 1-5 (Bundle): Fundamentals, Data Structures, Sorting, Searching, and Graph Algorithms" by Robert Sedgewick

Internal Assessment Pattern

Cognitive Level	Int. Test 1 (%)	Int. Test 2 (%)	Lab Assessments
Remember	25	25	
Understand	38	38	
Apply	37	37	
Analyze	--		30
Evaluate	--		25
Create	--		45
Total (%)	100	100	100

Sample Question (s)

Remember

1.Compute the time complexity of insertion in a linked list.
2.Define Abstract Data Type (ADT)?
3.Define a linear data structure and give one example.

Understand

1.How does the implementation of ADTs benefit software development?
2.What is the time complexity of a linear search in the worst case?
3.Differentiate between stack and queue.

Apply

1. Describe the process of implementing an ADT for a stack.
2. Draw the logical structure of a doubly linked list.

23CS403 Computer Organization and Architecture

3 0 0 3

Course Outcomes

1. Interpret the functional architecture of computing systems. (Understand).
2. Summarize the types of instruction and its micro operation with addressing modes (Understand)
3. Identify various arithmetic operations on fixed, floating point numbers and its representation (Apply)
4. Illustrate the concepts of control unit design and I/O processor(Understand)
5. Understand the memory hierarchy concepts (Understand)
6. Describe concept of parallelism and types of hazard(Understand)

CO-PO Mapping

COs	PO1	PO2	PO12	PSO1
1	3	2	1	2
2	3	2	1	2
3	3	3	1	2
4	3	2	1	2
5	3	2	1	2
6	3	2	1	3

3–Strongly linked | 2–Moderately linked | 1–Weakly linked

Unit I **13 Hours**

Overview & Micro operation

Components of a computer system – Performance measures - Classifying Instruction Set Architecture- Representing instructions -Micro operation – Logical operations – Shift operations - instruction codes - Computer Registers instruction –memory Reference instruction –Input-Output Reference instruction - Instruction cycle -Addressing and addressing modes.

Trends in Technology-Arithmetic micro-operations

Unit II **11 Hours**

Arithmetic Operations

ALU - Addition and subtraction with Signed Magnitude Data - Hardware Implementation – Multiplication – Hardware Implementation for Signed Magnitude Data – Division - Hardware Implementation for Signed Magnitude Data – Divide Overflow - Floating Point operations – Parallelism and Computer Arithmetic: Sub word Parallelism.

BCD Adder-BCD Subtraction

UNIT III **11 Hours**

Control Unit and Memory Systems

Basic MIPS implementation – Building data path – Control Implementation scheme – Memory hierarchy – Cache basics – Measuring and improving cache performance - Virtual memory- Input/output system- programmed I/O-DMA and Interrupts-I/O processors

Stack organization-RISC Vs CISC Architecture

Unit IV **13 Hours**

Parallelism

Instruction-level-parallelism – Parallel processing challenges – Flynn's classification – Multicore processors- Pipelining – Arithmetic pipeline –Instruction pipeline -Pipelined data path and control – Handling Data hazards & Control hazards – Exceptions.

Vector processing –single processor Vs parallel processor

Total: 48 Hours

Text Book(s):

1. David A. Patterson and John L. Hennessey, "Computer organization and design: The hardware /software interface", Morgan Kauffman / Elsevier, Fifth edition, 2014
2. M.Morris Mano," Computer System Architecture", 3rd edition, Pearson /PHI,1992.

Reference(s):

1. V.Carl Hamacher, Zvonko G. Varanesic and Safat G. Zaky, "Computer Organization ", 6th edition, Mc Graw-Hill Inc, 2012.
2. William Stallings "Computer Organization and Architecture, Seventh Edition, Pearson Education, 2007.
3. Andrew S Tanenbaum "Structured Computer Organization ", 5th edition, Pearson/PHI, 2007

Internal Assessment Pattern

Cognitive Level	Int. Test 1 (%)	Int. Test 2 (%)	Open book Exam (%)
Remember	40	--	--
Understand	40	50	--
Apply	20	50	80
Analyze	--	--	20
Evaluate	--	--	--
Create	--	--	--
Total (%)	100	100	100

SAMPLE QUESTION (S)

Remember

1. What is micro operation?
2. Show the Register Reference Instruction format.
3. Define PC and MAR.
4. What are the two types of data representation?
5. Define Associative Memory

Understand

1. Identify the basic functional units of the system
2. Explain about logic micro operations and its applications with examples
3. Differentiate RISC and CISC architecture in terms of their instruction set and addressing modes.
4. Compare hardwired control unit is differing from micro programmed control unit designs
5. Demonstrate control memory

Apply

1. Starting from an initial value of R=11011101, determine the sequence of binary values in R after a logical shift-left, followed by a logical shift-right and a circular shift-right.
2. Analyze the contents of Register A that holds 8 bit binary 11011001 and Determine the B-operand and the logic micro operation to be performed in order to change the value in A to: (i) 01101101 (ii) 11111101State the differences between register stack and memory stack.
3. Perform the arithmetic operations (+70) + (+80) and (-70) + (-80) with binary numbers in signed-2's complement representation. Use eight bits to accommodate each number together with its sign. Show that overflow occurs in both cases, that the last two carries are unequal, and that there is a sign reversal.
4. Show the hardware to be used for the addition and subtraction of two decimal numbers with negative numbers in signed- 10's complement representation. Indicate how an overflow is detected. Derive the flowchart algorithm and try a few numbers to convince yourself that the algorithm produces correct results.
5. The procedure for aligning mantissas during addition or subtraction of floating-point numbers can be stated as follows: Subtract the smaller exponent from the larger and shift right the mantissa having the smaller exponent a number of places equal to the difference between the exponents. The exponent of the sum (or difference) is equal to the larger exponents. Without using a magnitude comparator, assuming biased exponents, and taking into account that only the AC can be shifted,

derive an algorithm in flowchart form for aligning the mantissas and placing the larger exponent in the AC **[Open book questions]**

Apply

1. Smith and Goodman found that for a given small size, a direct –mapped instruction cache consistently outperformed a fully associative instruction cache using LRU replacement.

   a. Explain how this would be possible (*Hint:* You can't explain this with the three C's model because it "ignores" replacement policy)
   b. Explain where replacement policy fits into the three C's model, and explain why this means that misses caused by a replacement policy are "ignored"- or, more precisely, cannot in general be definitively classified by the three C's model.
   c. Are there any replacement polices for the fully associative cache that would outperform the direct-mapped cache? Ignore the policy of "do what a direct- mapped cache would do".
   d. Use a cache simulator to see if Smith and Goodman's results hold for memory reference traces that you have access to. If they do not hold, why not?

2. John takes two numbers in sign magnitude representation (the two numbers are same with different signs), The 1's complement of one number is 6. The difference between 1's complement of these two numbers is 32. Find the numbers. And also find the product of these two numbers using the result of 2's complement value of these two numbers.

Analyze

1. A two-word instruction is stored in memory at an address designated by the symbol W. The address field of the instruction (stored at W + 1) is designated by the symbol Y. The operand used during the execution of the instruction is stored at an address symbolized by Z. An index register contains the value X. State how Z is calculated from the other addresses if the addressing mode of the instruction is a. direct b. indirect c. relative d. indexed.
2. An 8-bit computer has a 16-bit address bus. The first 15 lines of the address are used to select a bank of 32K bytes of memory. The high-order bit of the address is used to select a register which receives the contents of the data bus. Explain how this configuration can be used to extend the memory capacity of the system to eight banks of 32K bytes each, for a total of 256K bytes of memory.

23EC505 Linear IC Applications Lab

0 0 3 1.5

Course Outcomes:

1. Demonstrate the linear and nonlinear applications of OP-AMP
2. Implement Active Filters using OP-AMP
3. Assess the waveform generators using IC 741 and 555 timers
4. Implement A/D and D/A convertors
5. Assess the applications of PLL and voltage regulators
6. Implement Real time applications using OP-AMP and 555 Timer

COs – POs Mapping

COs	PO_1	PO_2	PO_3	PO_4	PSO_1
1	3	2	2	2	3
2	3	2	2	2	3
3	3	2	2	2	3
4	3	2	2	2	3
5	3	-	2	2	3
6	3	3	3	2	3

3–Strongly linked | 2–Moderately linked| 1–Weakly linked

List of Experiments
Students will perform minimum twelve Experiments

1. Inverting and Non-inverting Amplifiers using Op Amps.
2. Adder and Subtractor using Op Amp.
3. Comparators and voltage Follower using Op Amp.
4. OP AMP Applications–differentiator, integrator circuit
5. Square wave and Triangular waves generator using OP-AMP
6. Schmitt Trigger Circuit–Using IC 741
7. Astable multivibrator using IC 741
8. Active Filters–LPF, HPF (first order only)
9. Active Filter–Band Pass Filterand Band Reject Filter
10. IC 555 Timer– Monostable Operation Circuit
11. IC 555 Timer- Astable Operation Circuit
12. IC 565 – PLL Applications.
13. RC Phase Shift using IC-741 Op-Amp
14. Voltage Regulator using IC 78XX,79XX, 723
15. Analog to Digital Converter using OP AMP
16. Digital to Analog Converter using OP AMP

List of Augmented Experiments*

1. Design a function generator to generate sine wave, square wave and triangular wave range from 1KHz to 1MHz
2. Design a filter eliminate the noise from ECG
3. Design a Mosquito repeller by using 555 Timers
4. Design a calling bell circuit which produce Ding-Dong Soundby using 555 timer

Reading Material(s)

1. Ramakanth A. Gayakwad, Op-Amps & Linear ICs, PHI, 4th Edition. 2002.
2. D. Roy Chowdhury,Linear Integrated Circuits, New Age International (p) Ltd, 2nd Edition,2003.
3. LICA lab Manual.

23TPX01 Term Paper

0 0 3 1.5

Course Outcomes

1. Interpret the literature to link the earlier research with the contemporary technologies
2. Communicate effectively as an individual to present ideas clearly and coherently
3. Review the research findings and its correlation to the latest applications
4. Prepare documents and present the concepts clearly and coherently
5. Inculcate the spirit of enquiry for self-learning
6. Identify interdisciplinary oriented topics

COs – POs Mapping

COs	PO_1	PO_4	PO_9	PO_{10}	PO_{12}	PSO_1	PSO_2
1	-	2		-	-	3	3
2	-	-		3	3		
3	3	-		-	-	3	3
4	-	-		3	-		
5	-	-	3	-	3		
6	1	-		-	-		

3–Strongly linked | 2–Moderately linked| 1–Weakly linked

23ESX02 Employability Skills II

0 0 2 0

Course Outcomes

1. Demonstrate oral communication and writing skills as an individual to present ideas coherently
2. Develop life skills with behavioral etiquettes and personal grooming.
3. Assess analytical and aptitude skills.
4. Develop algorithms for engineering applications.
5. Solve engineering problems using software.
6. Utilize simulation tools for testing.

COs – POs Mapping

COs	PO1	PO2	PO5	PO8	PO10	PO12
1					3	3
2				1	2	3
3	2	1		2		
4	2		2			
5	2		2			
6	2		2			

3–Strongly linked | 2–Moderately linked| 1–Weakly linked

Unit I

1. Communication Skills, Confidence and Quantitative Aptitude

Introduction to Campus Placements: Stages of Campus Placement, Skills assessed in Campus Placements & How to get ready?

Motivational Talk on Positive Thinking: Beliefs, Thoughts, Actions, Habits & Results (Success)

Resume Preparation: Resume? Templates? Mistakes to be avoided in a Resume, Steps to be followed in preparing it.(with examples)

Group Discussions (Recap): GD? Stages of a GD, Skills assessed in a GD, Blunders to be avoided, How to excel in a GD? (through Practice Sessions)

Psychometric Tests: Definition, Types of Psychometric Tests: Numerical Computation, Data Interpretation, Verbal Comprehension, Verbal Critical Reasoning and Personality Questionnaires

Exercises related to Communication: Story Writing, TAT etc

7Hours

2. Quantitative Aptitude

Square &Cube roots, Partnership, Logarithms, Progressions, Mensuration, Data Sufficiency

8 Hours

Unit II

DATA FLOW LEVEL

Continuous assignment structures, Delays, and Continuous assignments, Assignment to Vectors, Operators, Strength contention with Tri-reg Nets.

Practical Components

1. Perform the simulation of full adder and half subtractor using data flow modelling in Verilog HDL.
2. Perform the Dataflow modeling for multiplexer and demultiplexer in Verilog HDL.
3. Perform the Dataflow modelling for 3 to 8 decoder in Verilog HDL.
4. Perform the Dataflow modelling for n-bit Johnson counter in Verilog HDL.
5. Perform the simulation of parity bit generation using data flow modelling in Verilog HDL.
6. Perform the Dataflow modelling for 8-bit adder in Verilog HDL.
7. Perform the Dataflow modelling for n-bit right-to-left shift register in Verilog HDL.
8. Perform the Dataflow modelling for BCD addition in Verilog HDL.
9. Perform the Dataflow modelling for JK flipflop and T-flip flops in Verilog HDL.

15 Hours

Total 30 Hours

Textbook (s)

1. Padmanabhan, Tattamangalam R., and B. Bala Tripura Sundari. Design Through Verilog HDL. John Wiley & Sons, 2003.

Reference (s)

1. Palnitkar, Samir. *Verilog HDL: a guide to digital design and synthesis*. Vol. 1. Prentice Hall Professional, 2003.
2. Ciletti, Michael D. *Advanced digital design with the Verilog HDL*. Vol. 1. Upper Saddle River: Prentice hall, 2003.

23SIX01 Summer Internship I

0 0 0 1

Course Outcomes

1. Demonstrate the application of knowledge and skill sets acquired from the course and workplace in the assigned job function/s
2. Solve real life challenges in the workplace by analyzing work environment and conditions, and selecting appropriate skill sets acquired from the course
3. Articulate career options by considering opportunities in company, sector, industry, professional and educational advancement
4. Communicate and collaborate effectively and appropriately with different professionals in the work environment through written and oral means
5. Demonstrate the ability to harness resources by examining challenges and considering opportunities
6. Demonstrate appreciation and respect for diverse groups of professionals by engaging harmoniously with different company stakeholders

COs – POs Mapping

COs	PO1	PO2	PO8	PO10	PO12
1	3	-	-	-	-
2	3	-	-	-	-
3	-	-	-	-	3
4	-	-	-	3	-
5	-	2	-	-	-
6	-	-	3	-	-

23HSX10 Engineering Economics and Project Management

3 0 0 3

Course Outcomes

1. Illustrate the basic principles of engineering economics.
2. Demonstrate Cost-Volume-Profit (CVP) analysis in business decision making.
3. Implement the simple financial statements for measuring financial performance of a firm.
4. Evaluate investment proposals through various capital budgeting methods.
5. State key issues of organization, management and administration.
6. Determine the accurate project cost estimates and plan future activities.

COs – POs Mapping

CO_s	PO_1	PO_2	PO_{10}	PO_{11}	PO_{12}
1	3		2	1	2
2	3		1	2	1
3	1		3	2	2
4	1	2	3	2	1
5	2	2	1	3	1
6	1	2	2	3	1

3–Strongly linked | 2–Moderately linked | 1–Weakly linked

Unit I

Introduction to Engineering Economics - Demand Forecasting & Cost Analysis

Concept of Engineering Economics – Types of efficiency – Managerial Economics Nature and Scope – Law of Demand – Types of Elasticity of demand.

Demand Forecasting & Cost Analysis: Demand Forecasting: Meaning, Factors Governing Demand Forecasting, Methods of Demand Forecasting (Survey and Statistical Methods) – Cost Analysis: Basic Cost Concepts, Break Even Analysis.

Factors affecting the elasticity of demand – Supply and law of Supply **11 Hours**

Unit II

Market Structures - Financial Statements & Ratio Analysis

Different type of Markets Structures – Features – Price Out-put determination under Perfect Competition and Monopoly

Financial Statements & Ratio Analysis: Introduction to Financial Accounting – Double entry system – Journal – Ledger – Trail Balance – Final Accounts (with simple adjustments) – Financial Analysis through Ratios: Interpretation of Liquidity Ratios (Current Ratio and quick ratio), Activity Ratios (Inventory turnover ratio and Debtor Turnover ratio, Creditors Turnover Ratio, Capital Turnover Ratio), Solvency Ratios (Debt- Equity ratio, Interest Coverage ratio), and Profitability ratios (Gross Profit Ratio, Net Profit ratio, Operating Ratio, P/E Ratio and EPS).

Price output determination under Monopolistic markets, Accounting concepts and conventions **13 Hours**

Unit III

Investment Decisions and Fundamentals of Management

Time Value of Money – Capital Budgeting: Meaning, Need and Techniques of Capital Budgeting

Introduction to Management: Nature – Importance – Classical Theories of Management: F.W.Taylor's and Henri Fayol's Theory – Functions and Levels of Management – Decision Making Process – Inventory Control, Objectives, Functions – Analysis of Inventory – EOQ.

Maslow & Douglas McGregor theories of Management, ABC Analysis **12 Hours**

Unit IV

Project Management

Introduction – Project Life Cycle and its Phases – Project Selection Methods and Criteria – Technical Feasibility – Project Control and Scheduling through Networks – Probabilistic Models of Networks – Time-Cost Relationship (Crashing) – Human Aspects in Project Management: Form of Project Organization – Role & Traits of Project Manager.

Sources of Long-term and Short-term Project Finance **12 Hours**

Total: 48 Hours

Textbook (s)

1. Pravin Kumar, Fundamentals of Engineering Economics, Wiley India Pvt. Ltd. New Delhi, 2015

2. Rajeev M Gupta, Project Management, 2nd Ed., PHI Learning Pvt. Ltd. New Delhi, 2014

Reference (s)

1. Panneer Selvam. R, Engineering economics, 2nd Ed.,, Prentice Hall of India, New Delhi, 2013
2. R.B.Khanna, Project Management, PHI Learning Pvt. Ltd. New Delhi, 2011
3. R. Panneer Selvam & P.Senthil Kumar, Project Management, PHI Learning Pvt. Ltd. New Delhi, 2010
   A. Aryasri, Management Science, 4th Ed., Tata McGraw Hill, 2014
   A. Aryasri, Managerial Economics and Financial Analysis, 4th Ed., Tata McGraw Hill, 2014
4. Koontz & Weihrich, Essentials of Management, 6th Ed., TMH, 2010
5. Chuck Williams and Mukherjee, Principle of Management 7th Ed., Cengage Learning, 2013

SAMPLE QUESTION (S)

Internal Assessment Pattern

Cognitive Level	Int. Test 1 (%)	Int. Test 2 (%)	Open Book Exam (%)
Remember	25	25	--
Understand	35	35	--
Apply	40	40	50
Analyze	--	--	50
Evaluate	--	--	-
Create	--	--	--
Total (%)	100	100	100

Remember

1. Define Managerial Economics. Explain its nature and scope.
2. Define Production Function? List the various types of production functions
3. Define the meaning of productivity? Explain how productivity can be enhanced in the Indian industries.
4. Define management and its functions
5. List out short-term source of finance and explain briefly
6. Why is it essential to define project life cycle and divide it into various phases?

Understand

1. Summarize engineering economics with suitable examples.
2. Explain different elements of costs used in cost analysis
3. Illustrate the effect of price on demand and supply with the help of a diagram.
4. Explain the features of Perfect Competition
5. Describe the Top level Upper Middle level of management and its functions
6. Explain Price-Output determination under Perfect Competition under Market period

Apply

1. Consider the following data of company for the year 2015
   Sales = Rs.2,40.000/-
   Fixed cost = Rs.50,000/-
   Variable cost = Rs.75,000/-
   Find out the followings
   a) Profit b) BEP c) Margin of safety
2. The following trial balance of Mr. Ramesh, prepare trading, profit & loss A/c for the year ended 31.12.2018 and balance sheet as on that date.

Particulars	Debit (Rs.)	Credit (Rs.)
Capital		1,00,000
Drawing	18,000	
Furniture	32,500	
Machinery	15,000	
Bills payable		15,000
Interest paid	900	
Sales		1,00,000
Purchases	75,000	
Opening stock	25,000	
Advertisement	15,000	

Wages	2,000	
Insurance	1,000	
Commission received		4,500
Sundry debtors	28,100	
Cash in hand	20,000	
Sundry creditors		10,000
Interest received		3,000
Total	**2,32,500**	**2,32,500**

Adjustments:

Closing Stock Rs.60,000 b) Outstanding wages Rs.500

3. From the following balances as on the date March 31st, 2014.

Particulars	Amount (Rs.)	Particulars	Amount (Rs.)
10% Debentures	3,00,000	Cash in hand	30,000
6% Long term Loans	50,000	Debtors	15,000
Share capital	2,50,000	Opening stock	50,000
Creditors	1,00,000	Closing stock	40,000
Bill payable	45,000	Gross Profit	20,000
Sales	100000	Building	700000

Calculate: Current Ratio, Debt-equity ratio, Quick ratio, Inventory turnover ratio, Debtors turnover ratio

4. A company requires 40,000 kg of raw materials. The company incurs a handing cost of Rs.360/- plus freight of Rs.390 per order. The incremental carrying cost of inventory of raw material is Rs. 15 per kg. Calculate:
   a) EOQ b) Number of orders per annum c) How frequently should orders be placed
5. The following table gives the activities in a construction project and other related information:

Activity	Immediate Predecessors	t_0	t_m	t_p
A	-	1	9	11
B	-	5	6	7
C	A	5	7	9
D	A,B	4	7	10
E	C,D	1	4	7
F	C,D	7	9	11

   a) Draw PERT diagram
   b) Calculate total project duration
   c) Mark the critical path
   d) Find out the S.D and Variance of each activity
6. ABC Ltd., a US based organization, is engaged in manufacturing television screens. It is planning to establish a subsidiary organization in India to manufacture picture tubes. Cost studies produced the following estimates for the Indian subsidiary based on the estimated annual sales of picture tube (Rs.400000/-):

Particulars	Total Annual Cost (Rs.)	Percent of total annual cost that is variable
Materials	1936000	100%
Labour	900000	70%
Overhead	800000	64%
Administration	300000	30%

   The Indian production would be sold by manufacturer's representatives who would receive a commission of 8% of the sales. No portion of the parent organizations' expenses is to be allocated to the Indian subsidiary.

   Questions:

   1. Compute the sale price per picture tube to enable management to realize an estimated 10% profit on sale proceeds in India.
   2. Is it feasible for ABC Ltd., to invest in the Indian market by studying the preceding calculation? **(For Open Book Examination and not for semester end examination)**

Analyze:

1. From the following cases analysis the situation of price elasticity of product.

   Case 1:

Price of product (Rs.)	Quantity of Demand (Units)
100	1000
90	1500

   Case 2:

Price of product (Rs.)	Quantity of Demand (Units)
100	1000
70	1100

2. Analyze the attributes to be consider for selection project
3. Differentiate between Perfect Competition & Monopoly Competition
4. Compare significances and limitation of liquidity and solvency ratios.
5. You are given the following information about two companies in the year 2020.

Particular	Company – A	Company – B
Sales	Rs. 50,00,000	Rs. 50,00,000
Fixed Expenses	Rs. 12,00,000	Rs. 17,00,000
Variable Expenses	Rs. 35,00,000	Rs. 30,00,000

   A friend seeks your advices as to which company's shares be should purchase. Assuming the capital invested is equal for the two companies, state the advice that you will give.

6. A private school is considering the purchase a school bus to transport students to school. The initial cost of the bus is Rs.600,000. The life of bus is estimated to be five years, after the life time the vehicles would have to be scrapped with no salvage value. The school's management team has derived the following estimates for annual revenues and cost for the next five years.

year	Annual Revenue	Diver Cost	Repairs & maintenance	Other costs	Annual depreciation
1	330000	33,000	8,000	130000	120000
2	330000	35,000	13,000	135000	120000
3	350000	36,000	15,000	140000	120000
4	380000	38,000	16,000	136000	120000
5	400000	40,000	18,000	142000	120000

   The buses would be purchased at the beginning of the project (i.e., in Year 0) and all revenues and expenditures shown in the table above would be incurred at the end of each relevant year. A business consultant has advised management that they should use a cost of capital of 10% to evaluate this project.

   Questions:

   1. Attributes to be involved to estimate the net cash flow for each year in this project.
   2. Justify the steps involved in the calculation process of net present cash flows above the project investment. **(For Open Book Examination and not for semester end examination)**

23EC601 Cellular and Mobile Communications

3 0 0 3

Course Outcomes

1. Summarize basic cellular system, handoff, frequency reuse and improving capacity of cellular system
2. Demonstrate various interference types, frequency management and channel assignment
3. Interpret various cell site and mobile antennas
4. Outline the phase difference, propagation effects in various cell coverage environments
5. Assess the Multiple access schemes and GSM digital cellular system
6. Outline the 4G cellular technology

COs–POs Mapping

COs	PO_1	PO_2	PO_3	PO_4	PSO_2
1	2	-	-		2
2	3	2	-		3
3	2	-	-		2
4	3	2	2	2	3
5	3	2	2	2	3
6	3	2	2		3

3–Strongly linked | 2–Moderately linked| 1–Weakly linked

Unit I

Introduction to Cellular systems and Co-Channel Interference

Introduction to cellular mobile system, Evolution of cellular systems, Performance criteria, Basic cellular system, concept of frequency reuse, Trunking and Grade of Service, Improving capacity of cellular systems: Cell splitting, Sectoring, Micro cell concept, Handoff and dropped calls. Co-Channel Interference reduction factor, Desired C/I calculation for Omni directional and directional antenna systems.

Repeaters for range extension, Picocell zone concept

12 Hours

Unit II

Frequency Planning and Cell Site- Mobile Antennas

Adjacent channel interference: Next channel and neighboring channel interference, Frequency management: Numbering, grouping of channels, channel types, channel assignment: fixed channel assignment, non-fixed channel assignment. Cell Site and Mobile Antennas: Omni directional antennas, Directional antennas for interference reduction, space diversity antennas, and Umbrella pattern antennas, minimum separation of cell site antennas, roof mounted and glass mounted antennas, high gain antennas.

Interference in heterogeneous network, Effect of lowering the antenna height

12 Hours

Unit III

Cell coverage and Multiple access schemes

Cell coverage for signal and traffic**:** Signal reflections in flat and hilly terrain, effect of human made structures, phase difference between direct and reflected paths, constant standard deviation, straight line path loss slope, general formula for mobile propagation over water and flat open area, foliage loss, near and long distance propagation, antenna height gain, form of a point to point model, cell site antenna heights and signal coverage cells. Multiple access schemes: TDMA, FDMA and CDMA

Near and long distance propagation, WCDMA Architecture

13 Hours

Unit IV

Digital Cellular Systems and 4G Technology

Digital Cellular system: GSM Architecture, GSM operation, Channels and frame structure for GSM.

Evolution of 4G: Objectives and advantages, 4G Technologies: Ultra Wide band network, OFDM and MIMO antenna systems.

GSM protocols, Limitations of 4G

11 Hours
Total: 48 Hours

Textbook (s)

1. W.C.Y. Lee, Mobile Cellular Telecommunications, Tata McGraw Hill, 2nd Edition, 2006
2. Theodore. S. Rapport , Wireless Communications, Pearson education, 2nd Edition., 2002.
3. Gottapu Sasibhushana Rao, Mobile Cellular Communication, Pearson International, 2012

Reference (s)

1. D.Tse and P.Viswanath, Fundamentals of wirless communication, Cambridge University press, 2005.
2. W.C.Y.Lee , Wireless and Mobile Communications, McGraw Hill, 3rd Edition, 2006.

SAMPLE QUESTION (S)

Internal Assessment Pattern

Cognitive Level	Int. Test 1 (%)	Int. Test 2 (%)	Open Book Exam (%)
Remember	20	15	--
Understand	50	50	--
Apply	30	35	60
Analyze	-		40
Evaluate	--	--	--
Create	--	--	--
Total (%)	100	100	100

Remember

1. State two reasons for choosing 800MHz band for mobile radio systems.
2. List two disadvantages of conventional mobile system.
3. List two major approaches to achieve the ideal mobile telephone system.
4. Define multipath fading.

Understand

1. Represent grade of service.
2. Abstract the term co-channel interference.
3. Identify the major functions of MTSO.

Apply

1. Demonstrate cell splitting and types of cell splitting.
2. Demonstrate Handoff techniques.
3. Assess the frequency reuse concept of cellular systems.

[Open Book Examination Questions]

1. Find the frequency reuse factor and the cellular size that should be used for maximum capacity if the path-loss exponent is
   $\lambda = 4$
   $\lambda = 2$
   a. Assume that there are six co-channel cells in the first tier and all of them at the same distance of $D + 0.7R$ from the mobile. Use suitable approximations. If carrier-to-noise interference ratio of 20 dB is required for a satisfactory forward channel performance of a cellular system.

2. Compute the number of channels available in an FDMA system in such a way that an AMPS cellular operator is allocated with 15 MHz for each simplex band, and if B_t is 15 MHz, B_g is 15 KHz, and B_c is 30 KHz.

Analyse

1. Justify the effect of lowering the antenna height on interference in a valley.
2. Compare the C/I worst case for K=4 and K=7 pattern cellular systems.

3. Outline the limitations of conventional mobile systems and spectrum efficiency considerations.
4. Compare sectoring and micro cell zone concept.

[Open Book Examination Questions]

1. Breakdown all physical circumstances that relate to a stationary transmitter and a moving receiver such that the Doppler shift at the receiver is equal to
   i) 0 Hz
   ii) f_{dmax}
   iii) $-f_{dmax}$
3. Conclude the major factors causing propagation path loss and compare large-scale propagation path-loss models and small-scale propagation path-loss models in detail.
4. Compare the features of various wireless networks starting from 1G to 4G technologies (OBE).
5. Outline the salient features of wireless technology in the development of next generation cellular communication systems.

23EC602 Digital Signal Processing

3 0 0 3

Course Outcomes

1. Classify discrete time signals and systems
2. Implement Digital systems by using realization techniques
3. Implement discrete Fourier transform and Fast Fourier transform on time domain signals
4. Differentiate FIR and IIR digital filters
5. Demonstrate the concept Multirate signal processing
6. Interpret the architecture of Digital signal processors

COs – POs Mapping

COs	PO_1	PO_2	PO_3	PO_4	PSO_2
1	2	1	1		2
2	3	3	3		3
3	3	2	2		3
4	3	3	3	2	3
5	3	2		2	3
6	2	-		2	2

3–Strongly linked | 2–Moderately linked| 1–Weakly linked

Unit I

Introduction to Discrete–Time signals and systems

Classification of Discrete time signals, linear Time Invariant systems, stability, and causality, Linear convolution in time domain and graphical approach, Frequency Domain Representation of Discrete-Time Signals and systems. Concept of Z-transforms, Region of Convergence, properties, Inverse Z transform, Realization of Digital filter structures: Direct form-I, Direct form-II, Transposed form, Cascaded form, Parallel form

Lattice structure, Lattice-Ladder structure **12 Hours**

Unit II

Discrete–Time signals in Transform domain

Discrete Fourier Series(DFS),Discrete Time Fourier transforms(DTFT), Discrete Fourier transform(DFT), Properties of DFT , linear convolution using DFT, Circular convolution, Fast Fourier transforms (FFT) - Radix-2 decimation in time ,decimation in frequency FFT Algorithms, Decimation in frequency FFT Algorithms, Inverse FFT, Overlap-save method, Overlap-add method

Relation between DTFT, DFS, DFT, Radix-4FFT

12Hours

Unit III

IIR &FIR Digital Filters

Analog filter approximations–Butter worth and Chebyshev, Impulse Invariant transformation, Bilinear transformation, Design of IIR Digital filters from analog filters, FIR Digital Filters: Characteristics of FIR Digital Filters, frequency response, Design of FIR Digital Filters using Window Techniques, Frequency Sampling Technique.

Comparison of IIR & FIR filters. Frequency Transformation in digital domain,

13 Hours

Unit IV

Multirate Signal Processing & TMS Processors

Multirate Processing: Decimation, interpolation, sampling rate conversion, Implementation of sampling rate conversion. Introduction to DSP processors: Overview of Digital signal processors, Von Neumann Architecture, Harvard Architecture, Multiplier Accumulator (MAC), Pipelining, Architecture of TMS320C50,Bus structure, CPU, on chip memory, on-chip peripherals

Cascading sampling rate converters, Addressing modes

11Hours

Total: 48 Hours

Textbook (s)

1. Digital Signal Processing by Sanjit K.Mitra 2nd Edition , TATA McGraw Hill
2. John G. Proakis, Dimitris, G.Manolakis ,Digital Signal Processing, Principles, Algorithms, and Applications: Pearson Education / PHI, 4th Edition, 2013.
3. Digital Signal Processors – Architecture, Programming and Applications,, B.Venkataramani, M. Bhaskar, TATA McGraw Hill, 2002

Reference (s)

1. SanjitK.Mitra, Digital Signal Processing, Tata Mc Graw Hill publishers, 3rd Edition, 2009.
2. Alan V. Oppenheim, Ronald W. Schafer Digital Signal Processing, PHI, 4th Edition, 2007
3. Andreas Antoniou, Digital Signal Processing, TATA McGraw Hill , 2006
4. MH Hayes, Digital Signal Processing, Schaum's Outlines, Tata Mc-Graw Hill, 2007

SAMPLE QUESTION (S)

Internal Assessment Pattern

Cognitive Level	Int. Test 1 (%)	Int. Test 2 (%)	Open Book Exam (%)
Remember	25		--
Understand	35	25	--
Apply	20	45	60
Analyse	20	30	40
Evaluate	--		--
Create	--		--
Total (%)	100	100	100

Remember

1. Define Signal and System.
2. State the advantages and limitations of DSP?
3. Define about Gibb's phenomena
4. state the need of Multi rate signal processing
5. List the difference between FIR and IIR filters

Understand

1. Identify the following systems for time invariant
   (i) $y(n) = x(n) - x(n-1)$
   (ii) $y(n) = nx(n)$
   (iii) $y(n) = e^{x(n)}$
2. Identify the stability of the given systems
   (i) $y(n) = \cos(\ x(n))$
   (ii) $y(n) = x(-n-2)$
   (iii) $y(n) = ax^2(n)$
3. Illustrate whether the signal x(n)=sin15πn+ sin√2_n is periodic or not.
4. Illustrate windowing techniques to design FIR filters.
5. Represent y(n)=x(n)+2x(n-1)+3x(n-2)+2y(n-1)+3y(n-2) in direct form-**I** structure.

Apply

1. Realize the system given by the difference equation y(n)= -0.1y(n-1)+0.72y(n-2)+0.7x(n)-0.252x(n-2) in parallel form.
2. Find the DFT of a sequence x[n] = {1, 2, 3, 4, 4, 3, 2, 1}using DIT algorithm
3. Compute the IDFT of the sequence X[k] = {12, 0, 0, 0, 4, 0, 0, 0} using DIF Algorithm

[Open Book Examination Questions]

4. A DSP system is characterized by linear difference equation $y(n) = 2x(n) + 4x(n-1) + 6x(n-2) + 8x(n-3)$ with digital input $x(n) = \{1,0,1,1\}$. Find the output response of the system.Find the transfer function of FIR system
   [Open Book Examination Questions]
5. Show the expression for the output in terms of x(n) for the multi rate system given as follows

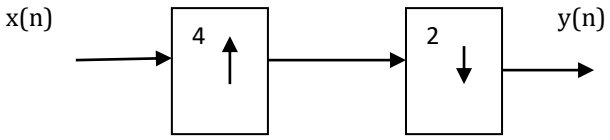

[Open Book Examination Questions]

Analyse

1. Resolve analog filter with transfer function $(s+0.1)/(s+0.1)^2+9$, into a digital IIR filter using bilinear transformation. The digital filter should have a resonant frequency of $\omega_r = \pi/4$

2. The specification of the desired LPF is
   Design a Butterworth IIR digital filter using Impulse invariant transformation technique

$$0.8 \le |H(\omega)| \le 0.1 \qquad 0 \le \omega \le 0.2\pi$$
$$|H(\omega)| \le 0.2 \qquad 0.32\pi \le \omega \le \pi$$

3. Compare the frequency response of Linear phase FIR filter
   Case(1) impulse response $h_{(n)}$ is symmetrical N is odd
   Case(2) impulse response $h_{(n)}$ is anti symmetrical N is even
   Case(3) impulse response $h_{(n)}$ is symmetrical N is even
   Case(4) impulse response $h_{(n)}$ is anti-symmetrical N is odd
   [Open Book Examination Questions]
4. Outline the structural realization of linear phase FIR filter for given N
   Case(1) h(n) = {3 2 1 2 3} for N=5
   Case(2) h(n) = {-3 -2 0 2 3} for N=5
   Case(3) h(n) = {3 2 1 1 2 3} for N=6
   Case(4) h(n) = {-3 -2 -1 1 2 3} for N=6
   [Open Book Examination Questions]
5. Compare different windowing techniques
   [Open Book Examination Questions]

23ECC12 System Verilog for Verification

3 0 2 4

Course Outcomes

1. Interpret the verification guidelines and data types
2. Execute the programs using Procedural Statements and Routines.
3. Demonstrate the System Verilog constructs through simulations
4. Explain the basic OOPs concepts.
5. Organize the design modules in the SV test bench.
6. Describe the benefits of using UVM for functional verification in digital designs

COs – POs Mapping

COs	PO_1	PO_2	PO_3	PO_4	PO_5	PSO_1
1	2	2	1	2	3	2
2	3	2	2	2	3	3
3	3	2	2	2	3	3
4	2	2	1	2	3	2
5	3	2	2	2	3	3
6	3	2	2	2	3	3

3–Strongly linked | 2–Moderately linked| 1–Weakly linked

Unit I

Introduction to Verification and Data Types

Introduction to the functional verification Process, The Verification Methodology, Basic Test-bench Functionality, Directed Testing, Constrained-Random Stimulus, Functional Coverage, code coverage, Testbench Components. Introduction to data types, Built-in Data Types, Fixed-Size Arrays, Dynamic Arrays, Queues, Associative Arrays, Array Methods, Creating New Types with typedef, Creating User-Defined Structures, Enumerated Types, Constants, Strings, Net Types, Time Scale.

String methods, operators

Practical Components

1. Develop an SV module to demonstrate the declaration of variables.
2. Develop a system Verilog code to demonstrate the declaration & application of packed and unpacked arrays.
3. Develop an SV module to demonstrate the application of Ques and simulate.
4. Develop a System Verilog program to create two dynamic arrays, insert an element and display the size.

13+8 Hours

Unit II

Assertions and Routines

Introduction, Assertions: Immediate assertions, Concurrent assertions, Example programs for assertions, Tasks, Functions, Void Functions, Automatic functions, Routine Arguments, Time Scale, System tasks.

Enumerated types, repeat and forever.

Practical Components

1. Develop a system Verilog code to demonstrate Immediate assertions
2. Develop a System Verilog testbench to demonstrate the Concurrent assertions
3. Develop a System Verilog test bench to differentiate the calling of a task and a function
4. Develop a System Verilog test bench to demonstrate the passing arguments by value & by reference to a function

11+8 Hours

Unit III

Basic OOPs

Introduction, OOP Terminology, Creating New Objects, Object Deallocation, Using Objects, Static Variables vs. Global Variables, Class Routines, Defining Routines Outside of the Class, Scoping Rules, Using One Class Inside Another, Understanding Dynamic Objects, Copying Objects.

Nested–Inner Class & Anonymous Classes–Generic Class Types

Practical Components

1. Develop an SV module to demonstrate the declaration of objects and classes
2. Write a System Verilog code to demonstrate the derived class to refer to members of the parent class.
3. Develop an SV module to demonstrate the inheritance

4. Develop an SV module to demonstrate the shallow copy to generate the different instances of a class

12+8 Hours

Unit IV

Connecting the Test bench and Design

Introduction to Universal verification methodologies (UVM), Interface: connecting the interface with DUT, Interface parametrization, Interface Driving and Sampling, Case study of Layered testbench: A testbench composed with transaction object, Generator, Driver, Monitor, Scoreboard, Environment, Test case, Interface. EDA tools for the design verification.

Interprocess communication: semaphore, mailboxes and event

Practical Components

1. Write a System Verilog program to demonstrate interface
2. Develop a test bench in SV to test a Sequence detector and simulate
3. Develop an SV module to demonstrate the verification of a simple adder using a layered testbench
4. Explore an EDA Development Environment.

12+8 Hours

Total: 48+32= 80Hrs

Textbook (s)

1. Chris Spear, "System Verilog for Verification: A Guide to Learning the Test bench Language Features", Springer-Verlag New York, Inc. Secaucus, NJ, USA, 2006
2. Donald Thomas, "Logic Design and Verification Using System Verilog", Create Space Independent Publishing Platform, 2014

Reference (s)

1. Language Reference Manual for System Verilog
2. SystemVerilog for Design and Verification Training- cadence

https://www.cadence.com/en_US/home/training/all-courses/82143.html

23ECC22 Embedded System Design and Real Time Operating System

3 0 2 4

Course Outcomes

1. Assess general features of embedded system and Implement the interfacing of Input and output devices with embedded target boards
2. Assess the various communication protocols and Implement the interfacing of devices with embedded target boards using communication protocols
3. Demonstrate hardware and firmware development of embedded systems and implement the interfacing of actuators with embedded target boards
4. Understand the core concepts of the QNX RTOS architecture, process/thread management and synchronization techniques
5. Implement inter-process communication methods for real-time systems.
6. Understand hardware access methods and configure QNX boot/OS images for specific hardware platforms.

COs – POs Mapping

COs	PO_1	PO_2	PO_3	PO_4	PO_5	PSO_1
1	2	-	-	-	-	2
2	3	2	2	2	3	3
3	3	2	2	2	3	3
4	2	-	-	-	-	2
5	3	2	2	2	3	3
6	3	2	2	2	3	3

3–Strongly linked | 2–Moderately linked| 1–Weakly linked

Unit I

Introduction to Embedded Systems

Definition, Embedded system versus general Computing Systems, Quality Attributes of Embedded Systems, The typical Embedded System, core of Embedded System, Memory, sensors and actuators, Communication Interface, Embedded Firmware, other system components, On board and off board communication interfaces: UART, USB, BLE, WIFI.

ZIGBEE, I2C

Practical Components

1. Blinking of LED using embedded target board
2. Interfacing of seven-segment display with embedded target board
3. Interfacing of keypad with embedded target board
4. Interfacing of LCD with embedded target board

12+8 Hours

Unit II

Hardware and firmware development

Embedded firmware design approaches and development languages, Embedded C, Fundamental Issues in Hardware and Software Co-Design, Hardware software tradeoffs, Integration of Hardware and Firmware. CAD and hardware Translation tools. Pre-processors, Interpreters, Compilers, Linkers. Debugging tools, Simulators and Laboratory tools.

Emulator, beagle bone embedded target board

Practical Components

1. Interfacing of LCD display using I2C protocol with embedded target board
2. Interfacing of high voltage device using relay with embedded target board
3. Interfacing an actuator with embedded target board and control it using Bluetooth
4. Interfacing of DC/Stepper motor with embedded target board and controlling it's speed using PWM Technique

12+8 Hours

Unit III

QNX OS Architecture and Processes & Threads Management

Overview of QNX OS architecture: Microkernel, process manager, and standards. Protected address spaces, process/thread model, and scheduling. Resource managers and shared objects.

Process management: creation, termination, and memory protection. Thread management: creation, termination, and synchronization. Synchronization techniques: mutexes, semaphores, and condition variables.

Characteristics and applications of a real time system, Types of real time tasks

Practical Components

1. Image flashing in Raspberry Pi and Setting PC for interfacing with Raspberry Pi.

2. QNX configuration and familiarization with QNX Momentics IDE.
3. Process creation, management, and synchronization.
4. Thread creation, management, and synchronization.

12+8 Hours

Unit IV

Inter-Process Communication (IPC) and Hardware Programming and Timing

Introduction to inter-process communication (IPC) and synchronization. Overview of IPC methods in QNX: message passing, pulses, and shared memory. Comparing IPC methods: advantages and disadvantages.

Hardware access methods: IO-mapped and memory-mapped IO. Interrupt handling and DMA-safe memory allocation. Timing architecture: periodic timing, one-shot timing, and timeouts.

Overview of QNX boot/OS image structure. Components of a boot image: startup code, kernel, drivers, and scripts.

Preemption vs Non-Preemption Scheduling, First-Come-First-Served

Practical Components

1. Implementation of IPC using passing message.
2. Implementation of IPC using shared memory.
3. Interrupt handling programming and hardware access programming.
4. Building and deploying QNX boot/OS images.

12+8 Hours

Total: 48+32 Hours

Mini capstone project: Design and implement a QNX-based embedded system.

Textbook (s)

1. Shibu .K.V, Introduction to Embedded Systems, 1st Ed, Tata McGraw Hill Education Private Limited, 2009.
2. Abraham Silberschatz, Peter B. Galvin, Greg Gagne, Operating System Concepts, 9th Edition, Wiley, 2018.
3. Brian Amos, Hands-on RTOS with Microcontrollers, Packt Publishing, 2020.

Reference (s)

1. Yogesh Misra, Programming and Interfacing with Arduino, CRC Press, 1st Edition, 2021.
2. Programming for Embedded Systems, Michael Barr, O'Reilly Media.
3. Online Resource

(i) QNX online training
(ii) QNX training material
(iii) QNX Documentation for SDP 8.0
(iv) QNX Everywhere page - https://blackberry .qnx.com/en/products/qnx-everywhere
(v) QNX Gitlab page - https://gitlab.com/qnx
(vi) QNX Developer Community: Access to forums and communities where they can
(vii) Ask questions and interact with other QNX developers.
(viii) QNX on Reddit: https://www.reddit.com/r/QNX/
(ix) QNX on StackOverflow: https://stackoverflow.com/questions/tagged/qnx
(x) QNX on YouTube: https://www.youtube.com/qnxcam

23ECC32 Principles of MIMO-OFDM Communications

3 0 2 4

Course Outcomes

1. Illustrate the Wireless Communication Environment
2. Assess the BER performance and diversity in wireless communications
3. Demonstrate the Wireless Channel Characteristics
4. Construct the MIMO wireless system model
5. Use SVD and alamouti coding to improve the MIMO system performance
6. Outline the Multi-Carrier Wireless Communication Techniques

COs – POs Mapping

COs	PO_1	PO_2	PO_3	PO_4	PO_5	PSO_2
1	2	2		2	3	2
2	3	3	2	2	3	3
3	3	3	2	2	3	3
4	3	3	2	2	3	3
5	3	3	2	2	3	3
6	3	3	2	2	3	3

3–Strongly linked | 2–Moderately linked| 1–Weakly linked

Unit I

Principles of Wireless Communications

The Wireless Communication Environment, Modelling of Wireless Systems, System model for Narrowband Signals, Rayleigh Fading Wireless Channel, Rician Fading Wireless Channel, BER Performance of Wireless Systems, Diversity in wireless communication.

Nakagami Fading, Hybrid Fading Models

Practical Components

1. Estimation of Free Space Path Loss
2. Distribution of Rayleigh Fading Wireless Channel
3. Analysis of BER Performance of Wireless Systems
4. Analysis of Diversity order

12+8 Hours

Unit II

The Wireless Channel

Basics of wireless channel modelling: Average delay spread, coherence bandwidth, Relation between ISI and coherence bandwidth, Doppler fading, coherence time, Jakes model for wireless channel correlation.

Log-normal shadowing, channel correlation effects

Practical Components

1. Calculation of average delay spread and rms delay spread
2. Estimation of coherence bandwidth
3. Plotting of Doppler spectrum using Jakes' model
4. Implementation of Jakes' model for autocorrelation

12+8 Hours

Unit III

Multiple Input Multiple Output Wireless Communications

MIMO System Model, MIMO Zero-Forcing Receiver, Singular Value Decomposition of the MIMO Channel, MIMO Capacity, Alamouti Coding Scheme, *V-BLAST Receiver*.

MIMO MMSE Receiver, Regularized Zero-Forcing

Practical Components

1. Modelling of MIMO system with a Rayleigh fading channel
2. Implementation of Zero-Forcing (ZF) detector
3. Singular Value Decomposition of the MIMO channel for capacity
4. Implementation Alamouti coding

12+8 Hours

Unit IV

Multi Carrier System

Multicarrier basics, Multi carrier Transmission, Orthogonal Frequency Division Multiplexing: Transmitter and Receiver schematics, Cyclic prefix operation, BER in OFDM, Peak-to-Average Power Ratio, MIMO-OFDM. *Filter Bank Multicarrier Modulation, Non-Orthogonal Multiple Access*

Practical Components

1. Generation of multiple orthogonal sinusoidal carriers
2. Visualization of FFT-based spectral analysis
3. Analysis of BER vs. Cyclic Prefix length
4. Estimation of PAPR distribution in OFDM

12+8 Hours

Total: 48+32 Hours

Textbook (s)

4. Aditya K Jagannadham, Principles of Modern Communication Systems, 1st edition, McGraw Hill, 2016.
5. Rakhesh Singh Kshetrimayum, Fundamentals of MIMO Wireless Communications, 1st edition Cambridge University Press 2017.

Reference (s)

1. Steve Beard, Cory, and William Stallings, Wireless communication networks and systems, Pearson, 2015.
2. Theodore S. Rappaport, Wireless communications: Principles and Practice, 2nd edition, Pearson education, 2010.
3. Tse David and Pramod Viswanath, Fundamentals of wireless communication, Cambridge university press, 2005.

23EC004 Virtual Instrumentation

3 0 2 4

Course Outcomes

1. Interpret basic building blocks of virtual instrumentation
2. Execute various graphical programming environment in virtual instrumentation
3. Asses various applications based on loops and error handling techniques
4. Execute various functions and I/O files
5. Implement Various applications on DAQ
6. Assess various real communications and interfacing

COs – POs Mapping

COs	PO_1	PO_2	PO_4	PO_5	PSO_2
1	2	-	2	2	2
2	3	2	2	3	3
3	3	2	2	3	3
4	3	2	2	3	3
5	3	2	2	3	3
6	3	2	2	3	3

3–Strongly linked | 2–Moderately linked| 1–Weakly linked

Unit I

Introduction of LabVIEW and Basic Programming:

LabVIEW Environment, Parts of VI, Front panel designing and working environment, Definitions of Control and Indicators, Types of Control and Indicators, Explanations of Controls Palette, Explanations Block Diagram and its working, Terminals, Functional Platte, Status Bar or Window tool bar, How to use Numerical functions, Designing of Boolean operations, Comparator applications

Practical Components

1. Generate basic signals using LabVIEW.
2. Perform Boolean operations using LabVIEW
3. Design traffic lights in LabVIEW
4. Calculating the power and energy of a given signal in LabVIEW.

12+8 Hours

Unit II

Implementing a VI and Programming Loops

About For loops, How to use Shift registers, while loop designing, Flat Sequences, Applications based on Loops-Average Temperature VI, Temperature Multiplot VI, Square root VI, Arrays, Auto-Indexing of arrays, Array Functions and different array operations, Polymorphism and Polymorphic Vis, Clusters & Cluster Functions, creating cluster, bundle and unbundle operations on Cluster, Error Clusters to capture and merge errors while running a VI, String Functions for formatting and manipulating strings

Practical Components

1. Build a VI to generate random numbers between 0 and 1000 until it matches a number selected by user
2. Build a VI to measure the temperature and display the average last three temperatures
3. Build a VI to plot the temperature and the running average on the same chart
4. Build the VI to measure square root of a number

12+8 Hours

Unit III

File I/O and Customizing Vis

File I/O VIs and Functions, High-Level File I/O Vis , Low-Level File I/O VI and Functions , Formatting Spreadsheet Strings Configuring the Appearance of Front Panels, Opening Sub VI Front Panels when a VI Runs, Keyboard Shortcuts for Controls, Editing VI Properties, Customizing the Controls and Functions Palettes

Practical Components

1. Build a VI to store three arrays in the spreadsheet
2. Build a VI to log the current temperature into ASCII file.
3. Build a VI to extract specific data
4. Build a VI to extract specific field

` **12+8 Hours**

Unit IV

Data Acquisitions Process and Instrument Control based on Embedded Controllers:

MAX and VISA explanations, GPIB communications, Serial communications and interfacing methods, acquiring the real time digital data to the LabVIEW User interface, controlling the LED operations, Acquiring of real time analog sensor values, controlling the Motors.

Practical Components

1. Build a VI that measures the voltage signal of the DAQ
2. Build a VI that counts pulses from the quadrature encoder on the DAQ
3. Build a VI that converts the number of events generated by quadrature encode to digital number display on LED
4. Build a VI that communicates with a serial or GPIB interface to an instrument using VISA functions.

12+8 Hours

Total: 48+32 Hours

Textbook (s)

1. Gary W. Johnson, Richard Jennings, 'Lab-view Graphical Programming', McGraw Hill Professional Publishing, 2001.
2. Lisa K Wells, Lab view for Everyone||, Prentice Hall of India.

Reference (s)

1. Barry Paton, —Sensor, transducers and Lab view||, Prentice Hall of India 2000.
2. Buchanan, W. —Computer buses||, CRC Press 2000

SAMPLE QUESTION (S)

Internal Assessment Pattern

Cognitive Level	Int. Test 1(%)	Int. Test 2 (%)	Lab Examination (%)
Remember	25	10	--
Understand	40	45	--
Apply	35	45	100
Analyse	--	--	--
Evaluate	--	--	--
Create	--	--	--
Total (%)	100	100	100

Remember

1. Draw and explain the graphical and VI models with design flow
2. Explain the essential need for Virtual Instrumentation and compare it with the traditional instruments.
3. Explain the role of different hardware's and software's in VI.

Understand

1. Explain the three parts of LabVIEW with three floating palette.
2. Discuss in detail about While and For Loops with Examples
3. Discuss in detail about different structures with examples
4. Describe in detail about various file types and File I/O functions

Apply

1. What are the NI-IMAQ and IMAQ vision functions used to acquire and display images?

2. Show the process how DAQ Assistant is used to acquire and generate signals with procedure for creating, configuring, Test and generate Lab VIEW code using DAQ Assistant.
3. Design a VI for pulse rate measuring in LabVIEW

23EC005 Cryptography and Network Security

3 0 2 4

Course Outcomes

1. Understand the fundamentals of cryptography, encryption and decryption algorithms
2. Understand the symmetric cryptographic algorithms
3. Explain the various asymmetric key cryptosystems and asymmetric key ciphers
4. Interpret the message authentication and integrity.
5. Demonstrate the functionalities of Email, IP and Web security
6. Understand various system security vulnerabilities

CO–PO Mapping

CO	PO1	PO3	PO4	PO5	PSO1
1	3	3	1	1	3
2	3	3	1	2	3
3	1	2	3	2	1
4	3	1	1	2	3
5	1	3	3	2	1
6	1	3	2	1	1

3–Strongly linked | 2–Moderately linked | 1–Weakly linked

Unit I Introduction to Number theory and Classical Encryption techniques

Computer Security Concepts, A model for network security, Divisibilty and Division algorithm, Euclidean algorithm, Modular arithmetic, prime numbers, Fermat's and Euler theorem, Testing of primality, Chinese Remainder Theorem, Discreate logarithms. Symmetric Cipher Model, Substitution Techniques: Caeser, Playfair, Hill, Vernem ciphers. Transportation Techniques.

Practical Components

1. Write a program that contains a string (char pointer) with a value "Hello world". The program should AND or and XOR each character in this string with 127 and display the result.
2. Caesar Cipher Implementation
3. Vernem Cipher Implementation
4. Hill Cipher Implementation **12+8 Hours**

Unit II Symmetric Key and Asymmetric Key Cryptosystems

Symmetric Key Cryptosystems: Principles of Private Key System, Data Encryption Standard (DES), Strength of DES. DES with double key, DES with triple key, **Finite fiels:** Polynomial arithmetic with coefficient in Zp, Finding GCD, Modular polynomial arithmetic, Finding multiplicative inverse.

Asymmetric key ciphers: RSA cryptosystem – Key distribution – Key management – Diffie Hellman key exchange -ElGamal cryptosystem – Elliptic curve arithmetic-Elliptic curve cryptography.

Practical Components

5. Simple D.E.S Implementation
6. DES with double key
7. R.S.A Implementation
8. Diffie–Hellman key exchange Implementation **12+8 Hours**

Unit III

Message Authentication and Integrity

Authentication requirement – Authentication function – MAC – Hash function – Security of hash function and MAC – SHA –Digital signature and authentication protocols – DSS- Entity Authentication: Biometrics, Passwords, Challenge Response protocols- Authentication applications – Kerberos, X.509

Practical Components

9. ElGamal public key cryptosystem Implementation
10. Digital signature generation

11. Calculate the message digest of a text using the SHA-1 algorithm.
12. Generation of Hash function **12+8 Hours**

Unit IV
Security Practice and System Security
Electronic Mail security – PGP, S/MIME – IP security – Web Security – System Security: Intruders – Malicious software – viruses – Firewalls.

Practical Components
13. Using Snort identify the Intruders if any.
14. Find the Packet Information using short.
15. Write program to detect malicious viruses
16. Write a program to provide security Electronic Mails

12+8 Hours
Total: 48+32 Hours

Text Books:
1. William Stallings, "Cryptography And Network Security – Principles and Practices", 7th edition, Pearson Education Limited 2017.
2. Atul Kahate, "Cryptography and Network Security", 2nd edition, Tata McGraw-Hill, 2003.
3. Behourz A Forouzan, Cryptography and Network Security, 2nd edition, Tata McGraw-Hill, 2011.

Reference Books:
1. Matt Bishop ,"Computer Security art and science ", Second Edition, Pearson Education, 2002
2. Wade Trappe and Lawrence C. Washington, "Introduction to Cryptography with Coding Theory" Second Edition, Pearson Education, 2007
3. Jonathan Katz, and Yehuda Lindell, Introduction to Modern Cryptography, CRC Press, 2007
4. Douglas R. Stinson, "Cryptography Theory and Practice", Third Edition, Chapman & Hall/CRC, 2006
5. Wenbo Mao, "Modern Cryptography – Theory and Practice", Pearson Education, First Edition, 2006.
6. OWASP top ten security vulnerabilities: http://xml.coverpages.org/OWASPT opTen.pdf

Internal Assessment Pattern

Cognitive Level	Int. Test 1 (%)	Int. Test 2 (%)	Lab Examination (%)
Remember	30	30	--
Understand	40	40	--
Apply	30	30	100
Analyze	--	--	--
Evaluate	--	--	--
Create	--	--	--
Total (%)	100	100	100

SAMPLE QUESTION (S)

Remember

1. Mention any two security attacks
2. List any two goals of security.
3. Define Hash function.

Understand

1. Differentiate between asymmetric and symmetric key cryptography.
2. How do we achieve authentication?
3. Differentiate between the two applications of hash function.

Apply

1. How do we Apply PGP to the Email Security?
2. Implement firewall using iptables command.
3. Can message encryption itself provide measure of authentication?

23CS503 Computer Networks

3 0 2 4

Course Outcomes

1. Gain the knowledge of OSI model and Switching techniques
2. Classify various protocols for data transmission in computer networks
3. Apply knowledge of different techniques of channel allocation methods for computer connectivity
4. Obtain the skills of subnetting, routing mechanisms and congestion issues in network design
5. Understand the importance of network layer with protocols
6. Understand transport layer and application layer with functionalities of main protocols such as HTTP, SNMP, TCP, UDP, IP

CO-PO Mapping

COs	PO1	PO2	PO4	PO5	PSO1	PSO2
1	2	1	2	2	2	2
2	*3*	2	2	3	*3*	*3*
3	3	2	2	3	3	3
4	2	-	2	3	2	2
5	1	-	2	3	1	1
6	2	-	2	3	2	2

3–Strongly linked | 2–Moderately linked| 1–Weakly linked

Unit I

Introduction to Data Communications: Components, Data Representation, Data flow

Network hardware, Network software, OSI, TCP/IP Reference models, Example Networks: ARPANET, Internet.

Physical Layer: Transmission media: Guided media- twisted pairs, coaxial cable, fiber optics, unguided media-Wireless transmission, Switching Techniques: Circuit Switching-Packet Switching-Message Switching.

Taxonomy of networking devices

Practical Components:

1. a) Familiarization with Networking Components and devices: LAN Adapters - Hubs – Switches - Routers etc.
2. Familiarization with Transmission media and Tools: Co-axial cable - UTP Cable - Crimping Tool - Connectors etc.
3. Preparing the UTP cable for cross and direct connections using crimping tool.
4. a) To configure the IP address for a computer connected to LAN and to configure network parameters of a web browser for the same computer.
   b) Configuration of TCP/IP Protocols in Windows

12 + 8 Hours

Unit II

Design Issues: Framing-error detection and correction-CRC-Elementary Data link Protocols: Stop and wait-Sliding Window protocols: Go-back-n-Selective Repeat-Medium Access sub layer: Channel allocation methods-Multiple Access protocols: ALOHA-CSMA-IEEE Standard 802.3 and Ethernet-

Data Link Control Protocols: HDLC-SLIP-PPP

Practical Components:

5. Implement the data link layer framing methods:
   a) Character stuffing method
   b) Bit Stuffing method
6. Implement on a data set of characters the two CRC polynomials: CRC 12 - CRC 16
7. Develop a simple data link layer that performs the flow control using
   a) The sliding window protocol,
   b) Go-Back-N Protocol.

12 + 6 Hours

Unit III

Network Layer: Design issues, Routing algorithms: shortest path routing, distance vector routing, Flooding, Hierarchical routing, Broadcast, Multicast, Congestion Control Algorithms-Approaches to Congestion Control, Quality of Service- leaky bucket algorithm, token bucket algorithm, The Network

layer in the internet-IPv4 Protocol, IP Addresses, Subnetting.

Internet control protocols

Practical Components:

8. Implement Dijkstra's algorithm to compute the Shortest path through a graph.

9. Take an example subnet graph with weights indicating delay between nodes. Now Obtain Routing table art each node using distance vector routing algorithm.

10. Take an example subnet of hosts. Obtain broadcast tree for it.

11. Write a program for congestion control using Leaky bucket algorithm.

12 + 8 Hours

Unit IV

Transport Layer: Transport Services, Elements of Transport protocols, Connection management, TCP and UDP protocols. Application Layer –Domain name system, SNMP, Electronic Mail, World Wide Web, HTTP

Proxy Servers, Data compression

Practical Components:

12. a) Installing of internal modem and connecting to Internet.
    b) To configure WiFi for your PC.
13. Wireshark
    a) Packet Capture Using Wire shark
    b) Starting Wire shark
    c) Viewing Captured Traffic
    d) Analysis and Statistics & Filters.
14. Do the following using NS3 Simulator
    a) NS3 Simulator-Introduction and installation
    b) Simulate to Find the Number of Packets Dropped
    c) Simulate to Find the Number of Packets Dropped by TCP/UDP
    d) Simulate to Find the Number of Packets Dropped due to Congestion
    e) Simulate to Compare Data Rate& Throughput.
    f) Simulate to Plot Congestion for Different Source/Destination
    g) Simulate to Determine the Performance with respect to Transmission of Packets
15. Write a program for how to connect and transfer data between two nodes with each other.
16. Study and build a sample network topology to configure it for dynamic routing protocol using NS3

12 + 10 Hours
Total: 48+32 Hours

Textbook (s)

1. Andrew S Tanenbaum, Computer Networks, 5th Edition, Pearson Education /PHI, 2013
2. Behrouz A. Forouzan, Data Communications and Networking, 5thEdition, Tata McGraw Hill Higher Education, 2013

Reference (s)

1. Willam Stallings, Data and Computer Communications,8th Edition, Pearson Prentice Hall, 2007
2. W.A. Shay, Thomson, Understanding communications and Networks, 3 rd Edition, Cengage Learning, 2005

SAMPLE QUESTION (S)

Internal Assessment Pattern

Cognitive Level	Int. Test 1 (%)	Int. Test 2 (%)	Lab Examination (%)
Remember	22	10	--
Understand	35	30	--
Apply	20	20	100
Analyze	20	20	--
Evaluate	--	20	--
Create	--	--	--
Total (%)	100	100	100

Remember

1. List the applications of Computer Networks
2. Write two differences between OSI and TCP/IP models.
3. State 5 key assumptions in Dynamic channel allocation?
4. State the purpose of DNS.
5. Define congestion.

Understand

1. Illustrate OSI Reference model.
2. Explain various design issues of data link layer.
3. What are the responsibilities of Data Link layer and explain Pure Aloha and Slotted Aloha protocols.
4. Describe Distance Vector routing algorithm with example and explain count to infinity problem 5. Represent the Manchester encoding for the bit stream: 0001110101.

Apply

1. What is the check summed frame transmitted if the message is 1101011011 and the generator polynomial is x 4 + x + 1 using CRC
2. Can you think of any circumstances under which an open-loop protocol, (e.g., a Hamming code) might be preferable to the feedback-type protocols.
3. Assuming that all routers and hosts are working properly and that all software in both is free of all errors, is there any chance, however small, that a packet will be delivered to the wrong destination?

Analyze

1. The following data fragment occurs in the middle of a data stream for which the byte-stuffing algorithm described in the text is used: A B ESC C ESC FLAG FLAG D. What is the output after stuffing?
2. The following character encoding is used in a data link protocol: A: 01000111; B: 11100011; FLAG: 01111110; ESC: 11100000 Show the bit sequence transmitted (in binary) for the four-character frame: A B ESC FLAG when each of the following framing methods are used: (a) Character count. (b) Flag bytes with byte stuffing. (c) Starting and ending flag bytes, with bit stuffing.
3. Analyze Data link protocols almost always put the CRC in a trailer rather than in a header.

Evaluate

1. Consider the user of differentiated services with expedited forwarding. Is there a guarantee that expedited packets experience a shorter delay than regular packets? Justify

23EC603 Digital Signal Processing Lab

0 0 3 1.5

Course Outcomes

1. Demonstrate various DSP operations.
2. Compute linear and circular convolution between two signals
3. Implement IIR and FIR filter design techniques
4. Execute various multirate signal processing techniques
5. Compute DFT and FFT of discrete time signals
6. Implement the concept of impulse response and multiple frequencies generation of the discrete time system

COs	PO_1	PO_2	PO_4	PO_5	PSO_2
1	2	-	2	3	2
2	3	2	2	3	3
3	3	2	2	3	3
4	3	2	2	3	3
5	3	2	2	3	3
6	3	3	2	3	3

List of Experiments

Students will perform minimum twelve Experiments

Implement the following using MATLAB

Generation of Discrete time signals and sum of sinusoidal signals

1. Determination of power and power spectral density of the given sequence
2. Verification of Linear convolution of two given sequences with different lengths.
3. Verification of circular convolution of two given sequences with different lengths.
4. To find frequency response of a given system(transfer function/ difference equation)
5. To find DFT / IDFT of given DT signal.
6. Determination of FFT for a given sequence.
7. Implementation of LP IIR filters for a given sequence.
8. Implementation of HP IIR filters for a given sequence.
9. Implementation of LP FIR filters for a given sequence.
10. Implementation of HP FIR filters for a given sequence.
11. Implementation of Decimation Process
12. Implementation of Interpolation Process
13. Implementation of I/D sampling rate converter
14. Generation of DTMF signals.
15. Impulse Response of First Order and Second Order Systems.

Implement the following using TMS processor

16. To study the architecture of DSP chips – TMS 320C 6X Instructions
17. linear convolution of two given sequences and plot
18. Perform MAC operation using various addressing modes
19. Generation of various signals and random noise
20. Magnitude response FIR LP filter using rectangular windowing technique
21. Magnitude response IIR LP filter

List of Augmented Experiments[1]

1. Mixing and separation of two voice signals
2. Add noise above 3kHz and then remove the Interference for Audio signal
3. Design a notch filter for the removal of power line interference from ECG signal by using TMS processor

Reading Material(s)

1. Digital Signal Processing by Sanjit K.Mitra 2nd Edition , TATA McGraw Hill
2. Digital Signal Processing, Principles, Algorithms, and Applications: John G. Proakis, Dimitris G. Manolakis, Pearson Education / PHI, 2007.
3. Digital signal processing lab Manual

23MPX01 Mini Project

0 0 3 1.5

Course Outcomes

1. Identify a contemporary engineering application to serve the society at large
2. Use engineering concepts and computational tools to get the desired solution
3. Justify the assembled/fabricated/developed products intended
4. Organize documents and present the project report articulating the applications of the concepts and ideas coherently
5. Demonstrate ethical and professional attributes during the project implementation
6. Execute the project in a collaborative environment

COs – POs Mapping

COs	PO1	PO2	PO3	PO4	PO5	PO6	PO7	PO8	PO9	PO10	PO11	PO12	PSO1	PSO2
1	3	2				3	2						3	3
2	3	3			3								3	3
3	3	3	3	2							3		3	3
4										3		3	3	3
5								3					3	3
6									3				3	3

3–Strongly linked | 2–Moderately linked | 1–Weakly linked

23ESX02 Employability Skills II

0 0 2 2

Course Outcomes

1. Demonstrate oral communication and writing skills as an individual to present ideas coherently
2. Develop life skills with behavioral etiquettes and personal grooming.
3. Assess analytical and aptitude skills.
4. Develop algorithms for engineering applications.
5. Solve engineering problems using software.
6. Utilize simulation tools for testing.

COs – POs Mapping

COs	PO1	PO2	PO5	PO8	PO10	PO12
1					3	3
2				1	2	3
3	2	1		2		
4	2		2			
5	2		2			
6	2		2			

3–Strongly linked | 2–Moderately linked| 1–Weakly linked

Unit I

1. Communication Skills, Confidence and Quantitative Aptitude

Resume (Recap): Resume? Templates? Mistakes to be avoided in a Resume and Steps to be followed in preparing it.

Group Discussions (Recap) & Practice: GD? Stages of a GD, Skills assessed in a GD, Blunders to be avoided, How to excel in a GD?

Practice sessions and sharing Feedback. (Screening sample Videos)

Interview Skills: Interview? Types of Interview, Dos & Don'ts, Skills assessed in an Interview, Mistakes to be avoided, How to equip oneself to excel? How to handle the Typical Interview Questions? (with Examples)

Mock Interviews: Practice sessions with Feedback.

Exercises related to Communication: Email Writing, Voice Versant., etc.

7Hours

2. Quantitative Aptitude

Time and Distance, Problems on Trains, Blood relations, Ratio and Proportions, Calendars, Clocks

8 Hours

Unit II

Verilog constructs for building the testbench

Procedural, Continuous and Procedural continuous assignments, Verilog parameters, inter assignment delay, intra assignment delay, Stem tasks: display tasks, tasks for file operation; Combinational UDPs and Sequential UDPs

Practical Components

1. Perform the simulation of a Verilog testbench to demonstrate the Procedural continuous assignments.
2. Perform the simulation of a Verilog testbench to demonstrate the Verilog parameters.
3. Perform the simulation of a Verilog testbench to demonstrate the inter assignment delay
4. Perform the simulation of a Verilog testbench to demonstrate the inter assignment delay
5. Develop a Verilog testbench that displays the content of a given file
6. Develop a Verilog testbench that writes the content into the file
7. Develop a Verilog testbench to display the file content and detect the end of a given file
8. Perform the simulation of a Verilog testbench to demonstrate the combinational UDP.
9. Perform the simulation of a Verilog testbench to demonstrate the sequential UDP

15 Hours

Total Hours 30

Textbook (s)

2. Padmanabhan, Tattamangalam R., and B. Bala Tripura Sundari. Design Through Verilog HDL. John Wiley & Sons, 2003.

Reference (s)

3. Palnitkar, Samir. *Verilog HDL: a guide to digital design and synthesis*. Vol. 1. Prentice Hall Professional, 2003.
4. Ciletti, Michael D. *Advanced digital design with the Verilog HDL*. Vol. 1. Upper Saddle River: Prentice hall, 2003.

23ATX02 Environmental Studies

0 0 0 0

Course Outcomes:

1. Translate the learner's attitude to think globally and act locally
2. Motivate environmental organizations to create a concern about our present state of Environment.
3. Find solutions for conservation of natural resources
4. Identify the benefits of ecosystem conservation, biodiversity protection, implement pollution prevention and control measures
5. Illustrate social issues of environmental protection and adopt sustainable developmental practices
6. Perceives the basic structure of environmental policy and law pertaining to specific environmental issues (water quality, air quality, biodiversity protection, Forest, etc.)

COs – POs Mapping

COs	PO_1	PO_6	PO_7	PO_{12}
1	1	2	3	1
2	2	-	3	2
3	3	3	-	2
4	-	2	3	2
5	-	-	3	1
6	-	3	2	1

3–Strongly linked | 2–Moderately linked| 1–Weakly linked

Unit I

Multidisciplinary Nature of Environmental Studies & Natural Resources

Definition, Scope and Importance, Multidisciplinary nature of Environmental Studies, Value of Nature - Productive, Aesthetic/Recreation, Option, Need for Public Awareness, Institutions (BNHS, BVIEER, ZSI, BSI) and People in Environment (Medha Patkar, Sundarlal Bahuguna, Indira Gandhi, Rachael Carson).
Natural Resources: Renewable and Non-renewable resources – Importance, uses, overexploitation/threats, and conservation of (i) forest (ii) water (iii) mineral (iv)food and (v) energy resources. (The topics include benefits and problems associated with dams, mining and case studies), role of an individual in conservation of natural resources.

Unit II
Ecosystem & Biodiversity
Ecosystems: Concept of an ecosystem, Structure and function of an ecosystem, Biogeological cycles (Energy flow, Carbon and Nitrogen Cycles), Ecological succession, Food chains, food webs and ecological pyramids. Introduction, types, characteristic features, structures and functions of the following ecosystems: a. Forest Ecosystem b. Aquatic Ecosystem
Biodiversity and its Conservation: Definition and levels of biodiversity, Bio-geographical classification of India, hot spots of biodiversity - India as a mega diversity nation, Threats to biodiversity, Endangered and endemic species of India, Conservation of biodiversity: In-situ and Ex-situ conservation.

Unit III
Environmental Pollution & Social Issues
Environmental Pollution: Definition, Cause, effects, control measures and case studies of: Air pollution b. Water pollution c. Soil pollution
Solid waste Management: Causes, effects and control measures of urban and industrial wastes. Disaster management (floods and cyclones)
Social Issues and the Environment: Sustainability, Urban problems related to energy, Water conservation and watershed management, Resettlement and rehabilitation of people; Environmental ethics: Issues and possible solutions, global warming, ozone layer depletion, Consumerism and waste products

Unit IV
Human Population and the Environmental Acts
Human Population and the Environment: Population growth, Affluence, Technology and Environmental Impact (Master Equation), Population explosion and Family Welfare Programme, Value Education, HIV/AIDS, Women and Child Welfare, Role of information Technology in Environment and human health.
Environment Protection Acts: Air (Prevention and Control of Pollution) Act, Water (Prevention and control of Pollution) Act, Wildlife Protection Act and Forest Conservation Act. Issues involved in enforcement of environmental legislation.

Text Book(s) and Reading Material (s)

1. T. E. Graedel, B. R. Allenby, Industrial Ecology and Sustainable Engineering, 1st Edition, Pearson Publications, 2009.
2. W. P. Cunningham, M.A. Cunningham, Principles of Environmental Science, 6th Edition, Tata McGraw Hill, 2008.
3. A. Kaushik, C. P. Kaushik, Perspectives in Environmental Studies, 4th Edition, New Age International Publishers, 2008.
4. T. E. Graedel, B. R. Allenby, Industrial Ecology and Sustainable Engineering, 1st Edition, Pearson Publications, 2009.
5. E. Bharucha, Textbook of Environmental Studies, 1st Edition, University Press (India) Pvt. Ltd., 2005.
6. H. S. Peavy, D. R. Rowe, G. Tchobanoglous, Environmental Engineering, 1st Edition, McGraw Hill Int. ed., 1984.
7. http://172.30.1.222/wbc/it/schedule.aspx.
8. http://172.30.1.8/wbc/it/coursepage.aspx.
9. https://www.edx.org/course/environmental-protection-and-sustainability.

23ECC13 VLSI Physical Design with Timing Analysis

3 0 0 3

Course Outcomes

1. Illustrate the stages of VLSI physical design, including partitioning, floorplanning, placement, and routing.
2. Explain graph-based algorithms, spanning trees, and shortest path techniques used for optimization in physical design.
3. Demonstrate Static Timing Analysis (STA) by analyzing timing parameters such as timing arcs, setup and hold checks, clock skew, and jitter.
4. Describe partitioning, floorplanning, and placement techniques to optimize chip area and performance.
5. Discuss routing strategies, including global and detailed routing, clock tree synthesis, and congestion minimization techniques.
6. Analyze advanced timing concepts such as timing analysis in latches, time borrowing, and crosstalk effects to enhance circuit performance and reliability.

COs – POs Mapping

COs	PO_1	PO_2	PO_3	PO4	PSO_1
1	3	2	2		1
2	3	3	2		2
3	3	3	3		2
4	3	2	3	2	2
5	3	3	3	2	3
6	3	3	3	2	3

3–Strongly linked | 2–Moderately linked| 1–Weakly linked

Unit 1

Fundamentals of VLSI Physical Design and Timing Analysis

Physical design flow, complexity analysis of algorithms, Graphs in physical design, graph searching, spanning trees, and shortest path algorithms. Static Timing Analysis (STA), timing arcs, delay parameters for combinational and sequential circuits, and timing analysis in sequential circuits. Clock skew, clock jitter.

Setup and Hold checks **12 Hours**

Unit 2

Partitioning, Floorplanning and Placement

Introduction to partitioning, partitioning techniques - Kernighan–Lin (KL) and Fidduccia-Mattheyses(FM) algorithms. floorplanning concepts, different representations, algorithms for optimizing chip area, and pin assignment. Wire length estimation techniques, min-cut placement, and various placement algorithms, placement legalization.

Analytic Placement, Simulated Annealing **12 Hours**

Unit 3

Routing Techniques in VLSI Physical Design

Introduction to clock routing, clock tree synthesis and clock routing algorithms. The global routing - optimization goals, single net routing, and shortest path-based routing strategies. Detailed routing- explaining channel routing, switchbox routing, and over-the-cell routing, Clock routing.

Modern Global Routing, Dogleg Routing **12 Hours**

Unit 4

Advanced Topics of Timing Analysis

Timing analysis in latches, time borrowing, crosstalk analysis, SSTA-Statistical Static Timing Analysis. The standard cell library - low-power cells, sub-threshold libraries, Timing library and Process Design Kits (PDKs) for fabrication.

Gate Sizing, Buffering, Netlist Restructuring **12 Hours**

Textbook (s)

1. Kahng, A.B., Lienig, J., Markov, I.L., Hu, J., "VLSI Physical Design: From Graph Partitioning to Timing Closure", Springer.
2. Sherwani, N.A., "Algorithm for VLSI Physical Design Automation", 2nd Ed., Kluwer.
3. J. Bhasker and Rakesh Chadha, "Static Timing Analysis for Nanometer Designs A Practical Approach" Springer 2009

Reference (s)

1. Bhatnagar, H. "Advanced ASIC Chip Synthesis: Using Synopsys Design Compiler Physical Compiler and Prime Time"; Kluwer Academic Publishers: New York, NY, USA, 2002
2. "Modern VLSI Design: IP-Based Design" – Wayne Wolf, Pearson

23ECC23 ARM Processor

3 0 0 3

Course Outcomes

1. Explain the fundamentals of ARM embedded systems, ARM processor architecture, registers, pipeline, exceptions, interrupts, and ARM processor families
2. Interpret the ARM instruction set, including data processing, branch, load-store, program status register, and conditional execution instructions
3. Develop ARM assembly language programs using data processing, branching, and memory access instructions to solve simple computational problems
4. Develop ARM assembly programs for arithmetic operations, block data transfer, and interfacing of input/output devices and actuators using ARM-based embedded target boards
5. Analyze and implement embedded system applications using ARM assembly programming techniques for hardware interfacing and memory manipulation
6. Apply the Thumb instruction set and ARM–Thumb interworking concepts to develop efficient embedded system programs

COs – POs Mapping

COs	PO1	PO2	PO_3	PO_4	PSO1
1	2				2
2	2				2
3	3	2	2		3
4	2			2	2
5	3	2	2	2	3
6	3	2	2	2	3

3–Strongly linked | 2–Moderately linked| 1–Weakly linked

Unit I

ARM Processor Fundamentals

ARM Embedded System: The RISC design philosophy, ARM Design Philosophy, Embedded system hardware, Embedded system software. ARM Processor Fundamentals: Registers, Current Program Status Register, Pipeline, Exceptions, Interrupts, and the Vector Table, Core Extensions, Architecture Revisions,
ARM Processor Families

12 Hours

Unit II

The ARM Instruction Set

Data processing instructions (Move Instructions, Arithmetic Instructions, Logical Instructions, Comparison Instructions, Multiply instructions), Branch Instructions, Load-Store Instructions (Single-Register Transfer, Single-Register Load-Store Addressing Modes, Multiple-Register Transfer, Stack Operations, Swap Instruction), Software Interrupt Instruction, Program Status Register Instructions, Loading Constants, *Conditional Execution*

12 Hours

Unit III

Programming using ARM Instruction Set

Programs for performing arithmetic operations, Program for block transfer of data from code memory location to another memory location, Programs for interfacing and operating IO device and actuators
ARM based embedded target board

12 Hours

Unit IV

The Thumb Instruction Set

Thumb Register Usage, ARM-Thumb Interworking, Other Branch Instructions, Data Processing Instructions, Single-Register Load-Store Instructions, Multiple-Register Load-Store Instructions, Stack Instructions, *Software Interrupt Instruction*

12 Hours
Total: 48 Hours

Textbook (s)

1. Andrew N. Sloss, Dominic Symes, Chris Wright, ARM System Developer's Guide: Designing and Optimizing System Software , 1 st Edition, Elseveir and Morgan Kaufmann Publishers, 2008 2021
2. Trevor Martin, The insider's guide to the Philips ARM7-Based Microcontrollers, Hitex (UK) Ltd., 2005

Reference (s)

1. Steve Furber, ARM System-on-Chip Architecture , 2 nd edition, Addison-Wesley Professional, 2000.

23ECC33 5G Communications

3 0 0 3

Course Outcomes

1. Illustrate the requirements and goals of Next-Generation Wireless Systems
2. Identify the potential and key applications of 5G Technology
3. Demonstrate the 5G Network architecture and spectrum management
4. Illustrate the concept of small cells and Multiuser MIMO for 5G
5. Assess the challenges of mmWave Massive MIMO and Beamforming Techniques
6. Abstract the concept of wireless energy harvesting

COs – POs Mapping

COs	PO_1	PO_2	PO_3	PO_7	PSO_2
1	2	2			2
2	2	2			2
3	3	2	2		3
4	2	2			2
5	3	2	2		3
6	2	2		2	2

3–Strongly linked | 2–Moderately linked| 1–Weakly linked

Unit I

Introduction to 5G communications

Evolution of cellular systems, requirements, goals, and vision of the next generation wireless communication systems, usage scenarios, enhanced mobile broadband (eMBB), ultra-reliable low latency communications (URLLC), massive machine type communications (MMTC). **12 Hours**

6G Roadmap, AI and Machine Learning in Cellular Networks

Unit II

5G Network Scenario

5G potential and applications, new radio (NR), standalone and non-standalone mode, centralized RAN, open RAN, multi-access edge computing (MEC), network function virtualization (NFV), network slicing, D2D communications, 5G IoT, V2X communications, spectrum for 5G, spectrum access/sharing.

Heterogeneous Networks, Interference Management

12 Hours

Unit III

5G key enablers

Small cells, Multiuser MIMO, uplink/downlink data transmission, capacity bounds, achievable rate, favourable propagation, channel hardening, and energy and spectral efficiency-trade-off.

mm Wave massive MIMO: Challenges and channel modelling analog, digital, and hybrid beamforming

Block diagonalization, OMP algorithm

12 Hours

Unit IV

Beyond 5G key enablers

Wireless energy harvesting: Energy-rate trade-off Simultaneous wireless information and power transfer (SWIPT), time-switching, power splitting Wireless powered communication networks Outage probability and throughput.

Hybrid Energy Harvesting Systems, IRS-Assisted SWIPT Systems **12 Hours**

Total: 48 Hours

Textbook (s)

1. Jonathan Rodriguez, Fundamentals of 5G Mobile Networks, 1st edition, Wiley, 2015.
2. Erik Dahlman, Stefan Parkvall, Johan Sköld, 5G NR: The Next Generation Wireless Access Technology, 2nd edition, Academic Press, 2020.
3. Emil Björnson, Jakob Hoydis, Luca Sanguinetti, Massive MIMO Networks: Spectral, Energy, and Hardware Efficiency, 1st edition, Now, 2018.

Reference (s)

1. Theodore S. Rappaport, Robert W. Heath Jr., Robert C. Daniels, James N. Murdock, Millimeter-Wave Wireless Communications, 1st edition, Pearson education, 2014.
2. Sotiris Nikoletseas, Thanasis Giannakos, Konstantinos S. Nikita, Wireless Power Transfer Algorithms, Technologies and Applications in Ad Hoc Communication Networks, 1st edition, Springer, 2016.
3. Patrick Marsch, Ömer Bulakci, Olav Queseth, Mauro Boldi, 5G System Design: Architectural and Functional Considerations and Long-Term Research, 1st edition, Wiley, 2018.

23EC006 Wireless Sensor Networks

3 0 0 3

Course Outcomes

1. Exemplify wired and wireless networks for real time applications
2. Summarize sensor network architectures for various applications
3. Interpret various operations in sensor node and transceiver design
4. Classify suitable medium access protocols, routing protocols, security protocols and radio hardware
5. Implement prototype sensor networks using commercial components
6. Differentiate various infrastructure management and sensor network platform tools

COs – POs Mapping

COs	PO_1	PO_2	PO_3	PO_4	PSO_1	PSO_2
1	2		2	2	2	2
2	2		2	2	2	2
3	2		2	2	2	2
4	2		3	2	2	2
5	3	2	3	3	3	3
6	3	2	2	3	3	3

3–Strongly linked | 2–Moderately linked| 1–Weakly linked

Unit- I

Sensor Network architectures

Introduction to ISO/OSI layers, Key definitions of WSN, Advantages of sensor networks, Unique constraints and challenges, Driving Applications, Enabling Technologies for WSNs. Single node architecture-Hardware Components, Energy consumption of sensor nodes, Operating system and execution environment, Network architecture-Sensor network scenarios. Optimization goals, Figures of merits, Gate way concepts.

Smart sensors, SoC sensor nodes **12 hours**

Unit-II

PHY and MAC Layer Protocols

Physical layer, Transceiver design considerations, Personal area Networks (PANs), Hidden Node and Exposed node Problem, Topologies of PANs, Topologies of MANETs, and Topologies of WANETs. Issues in designing a MAC protocol for WSNs, Design goals of a MAC protocol for WSNs, Classification of MAC Protocols, and Contention based protocols.

Network throughput, Network lifetime **12 Hours**

Unit- III

Network and Transport Layer Protocols

Issues in designing a routing protocol for ad-hoc wireless networks, Classification of routing Protocols, Table-driven routing protocols, On-demand routing protocols, Hybrid routing Protocols, Routing Protocols with efficient flooding mechanism, Hierarchical routing protocols , Power aware routing Protocols, Proactive routing. Issues in designing Transport layer for ad-hoc wireless Networks, Design goals of Transport layer for ad-hoc wireless Networks, Classification of transport layer solutions, TCP over ad-hoc wireless networks.

Lifetime of sensor nodes, IP based sensor networks **12 Hours**

Unit IV

Application Layer and programming challenges

Topology control, Clustering, Time Synchronization, Localization, Positioning, Sensor Tasking and Control, Security in ad-hoc wireless networks, Network security requirements, Issues and Challenges in security provisioning, Network security attacks, Key management, Security Routing in ad-hoc wireless networks. Sensor node hardware-Berkeley motes, Programming challenges, Node level software platforms, Node level simulators, State centric programming.

WSN in IoT, WSN for Health monitoring **12 Hours**

Total: 48 Hours

Textbook (s)

1. C. Siva Ram Murthy and B.S.Manoj, Ad Hoc Wireless Networks: Architectures and Protocols, PHI, 2004.
2. Jagannathan Sarangapani, Wireless Ad- hoc and Sensor Networks: Protocols. Performance and Control , CRC Press,2007
3. Holger Karl &Andreas Willig, Protocols and Architectures for Wireless Sensor Networks, John Wiley, 2005.

Reference (s)

1. KazernSohraby, Daniel Minoli, &TaiebZnati, Wireless Sensor Networks- Technology, Protocols and Applications John Wiley, 2007.
2. Feng Zhao & Leonidas J. Guibas, Wireless Sensor Networks- An Information Processing Approach, Elsevier, 2007.
3. C.K. Toh , Ad- Hoc Mobile Wireless Networks: Protocols & Systems, Prentice Hall, 2002
4. C. S. Raghavendra, Krishna M. Sivalingam, Wireless Sensor Networks, Springer, Ist Edition,2006
5. S Anandamurugan ,Wireless Sensor Networks, Lakshmi Publications, 2010

SAMPLE QUESTION (S)
Internal Assessment Pattern

Cognitive Level	Int. Test 1 (%)	Int. Test 2 (%)	Open Book Examination (%)
Remember	45	--	--
Understand	45	50	--
Apply	10	50	50
Analyse	--	--	50
Evaluate	--	--	--
Create	--	--	--
Total (%)	100	100	100

Remember

1. State the transceiver design considerations
2. List out any two different types optimization goals
3. Define wireless sensor network
4. Recall the design goals of Transport layer protocol

Understand

1. Explain the hidden node and exposed node problem
2. Summarize issues in designing MAC protocol for ad-hoc wireless networks
3. Illustrate the unique constraints and challenges of WSNs

Apply

1. Implement different Network security attacks
2. Demonstrate the programming challenges and applications of WSN
3. Construct different transport layer solutions for any real time application **[Open-Book Question]**

Analyse

1. Compare and Contrast between connection based MAC protocols with Scheduling mechanism
2. Organize different ways of designing a Routing protocols for Ad Hoc Wireless networks
3. Outline the unique constraints and challenges of WSNs
4. Compare between active and passive attacks
5. For the following scenario, please suggest a good Transport Layer strategy to take care of packet loss issues. Source: A; Destination: B. The left side is a campus cable based network. The right side is a wireless, multi-hop network. Provide clear solution. **[Open-Book Question]**

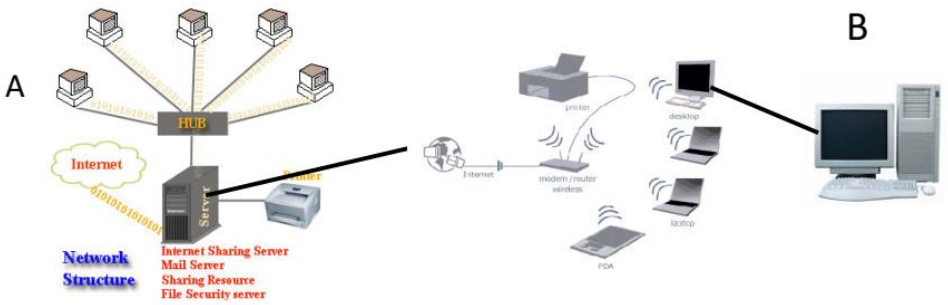

6.Suppose we have a network as follows. The marked part is a network congestion area. If A wants to send packets to B, how does A detect such a congestion area? Suggest a reasonable, low-overhead solution.

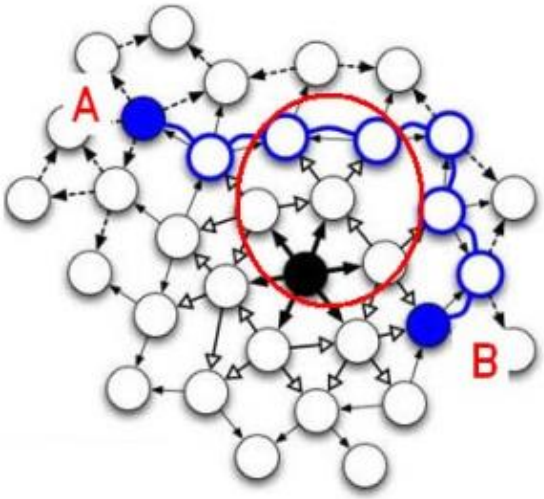

23IT403 Operating Systems

3 0 0 3

Course Outcomes

1. Understand computer resources and operating system management.
2. Analyze various CPU Scheduling Algorithms for Process Management.
3. Examine process synchronization and coordination of operating system.
4. Analyze the Main Memory Management and allocation strategies.
5. Identify the use of Virtual Memory management policies with respect to storage management.
6. Identify the need of File-System Interface and I/O Systems.

CO – PO Mapping

COs	PO_1	PO_{12}
1	3	2
2	3	2
3	3	2
4	3	2
5	3	2
6	3	1

3–Strongly linked | 2–Moderately linked | 1–Weakly linked

Unit I

Operating-Systems Overview and Process Management

Operating-System Overview: Computer-System Organization and Architecture, Operating-System Structure, Operating-System Operations & Services, System Calls & its types.
Threads: Multi Core Programming, Multithreading Models, Thread Scheduling algorithms.
Process Management: Process Concepts, Process Scheduling Criteria, Scheduling Algorithms and evaluation.
Thread issues, Multilevel Queue, Multilevel feedback Queue Scheduling

12 Hours

Unit II

Inter Process Communication Mechanism

Process Synchronization: Cooperative process, the Critical Section Problem, Peterson's Solution, Synchronization Hardware, Semaphores, Classical Synchronization problems, Monitors.
Deadlocks: Deadlock Characterization, Methods for Handling Deadlocks, Deadlock Prevention, Deadlock Avoidance & Detection, Recovery from Deadlock.
Synchronization Examples-Synchronization in Solaris, Synchronization in Linux. **12 Hours**

Unit III

Memory Management

Main Memory: Contiguous Memory allocation, Swapping, Segmentation, Paging, Segmented paging, Multilevel paging.
Virtual Memory Management: Demand Paging, Page Replacement algorithms, Allocation of Frames.
Structure of page table, Thrashing, Memory-Mapped Files **12 Hours**

Unit IV

File System Interface & I/O Systems

Mass-Storage Structure: Disk structure, Disk Scheduling, Disk management, Raid Structure.
File System: Access Methods, Directory Structures, Allocation Methods, Free-Space Management.
I/O Systems: I/O hardware Application of I/O Interface, Kernel I/O Sub-System.
File Sharing, File System Recovery **12 Hours**

Total: 48 Hours

Textbook (s)

1. Abraham Silberschatz, Greg Gagne, Peter B. Galvin, Operating System Concepts, 9th Edition, Wiley, 2016.
2. Harvey M. Deitel, Paul J. Deitel, David R. Choffnes, Operating Systems, 3rd Edition, Pearson Prentice Hall, 2004.

Reference (s)

1. William Stallings, Operating Systems: Internals and Design Principles, 7th Edition, Pearson Prentice Hall, 2013.
2. D. M. Dhamdhere, Operating systems: A Concept based Approach, 2nd Edition, TMH, 2006.
3. Crowley, Operating System: A Design Approach, 1st Edition, TMH, 2001.
4. Andrew S Tanenbaum, Modern Operating Systems, 3rd Edition, PHI, 2009.

SAMPLE QUESTION (S)

Internal Assessment Pattern

Cognitive Level	Int. Test 1 (%)	Int. Test 2 (%)	Open Book Examination (%)
Remember	20	20	--
Understand	40	30	--
Apply	30	30	50
Analyze	10	20	50
Evaluate			
Create	--	--	--
Total (%)	100	100	100

Remember

1. List any four operating systems
2. Define operating system
3. List four operating system services

Understand

1. Explain System calls
2. Explain the role memory management in operating system
3. Illustrate the working principle critical section problem

Apply

1. When multiple transactions are being executed by the operating system in a multiprogramming environment, there are possibilities that instructions of one transaction are interleaved with some other transaction. Apply the suitable concept to overcome the problem
2. Give an example of a scenario that might benefit from a file system supporting an append-only access write.

Analyze

1. Context switching between two threads of execution within the operating system is usually performed by a small assembly language function. In general terms, what does this small function do internally?
2. Compare CPU scheduling algorithms
3. Analyze the general strategy behind deadlock prevention and give an example of a practical deadlock prevention method.

Open Book Exam Questions

1. A file to be shared among different processes, each of which has a unique number. The file can be accessed simultaneously by several processes, subject to the following constraint: the sum of all unique numbers associated with all processes currently accessing the file must be less than n. Write a monitor to co-ordinate the access to the file. Ou may want to write start_access and end_access monitor procedures.

2. Consider a paging system with the page table stored in memory:
    a. If a memory reference takes 200 nanoseconds, how long does a paged memory reference take?
    b. If we add associative registers, and 75% of all page-table references are found in the associative registers, what is the effective memory reference time?

23CS603 Software Engineering

3 0 0 3

Course Outcomes

1. Explain the need of Software Life Cycle Models
2. Build end-user requirements into system and software requirements,
3. Summarize the system models of software engineering
4. Identify and apply appropriate software architectures and patterns to carry out high level design
5. Choose various testing techniques during software development
6. Categorize Risk management and Software quality for software products

CO–PO Mapping

CO	PO4	PO5	PO8	PO11	PSO1
1	3	3	2	2	2
2	3	3	2	2	2
3	3	2	2	2	2
4	2	2	2	2	2
5	2	3	2	2	2
6	2	3	2	2	2

3–Strongly linked | 2–Moderately linked | 1–Weakly linked

UNIT – I

Introduction to Software Engineering and SDLC, Software Myths, CMMI, Process models: Linear Sequential model, Prototyping model, Evolutionary models: Spiral model, Agile developmental methodologies-Scrum & XP

Incremental model, software development : Product based and application based **12 Hours**

Unit II

Software Requirements: Functional and non-functional requirements, user requirements, system requirements, interface specification.

Software Requirements Engineering Process, Feasibility studies, Requirement's elicitation and analysis, requirements validation.

System models: Context models, behavioural models, data models, object models. \

Structure of Software Requirements Document, Structured analysis methods **12 Hours**

Unit III

Design concepts: Data design, software architecture, Architectural styles and patterns, User interface design - Golden rules, User interface analysis and design and steps. Conceptual model of UML, basic structural modeling, Sattic and Dynamic UML diagrams : class diagrams, sequence diagrams, collaboration diagrams, use case diagrams, etc.,

Data Acquisition System - Monitoring and Control System **12 Hours**

Unit IV

Testing strategies and Risk Management: Testing levels: Unit testing, integration testing, system testing – alpha and beta testing, Testing Types: black box and white box testing techniques, Cyclomatic Complexity, debugging, Risk management - Risk types, strategies, estimation and Planning. Software Quality - Quality assurance and its techniques

Software measurement, metrics for software quality **12 Hours**

Total: 48 Hours

Textbook (s)

1. Roger S. Pressman, Software Engineering, A Practitioner's Approach, 8th Edition, McGraw-Hill International Edition, 2015
2. I. Sommerville, Software Engineering, 7th Edition, Pearson education, 2004.

3. Rajib Mall, Fundamentals of software Engineering, 4th Edition, Eastern Economy Edition, 2014.

Reference(s)

1. K K Aggarwal and Yogesh Singh, Software Engineering,3rd Edition, New age international publication,2008

SAMPLE QUESTION (S)

Internal Assessment Pattern

Cognitive Level	Int. Test 1 (%)	Int. Test 2 (%)	Open Book Examination (%)
Remember	30	30	--
Understand	40	40	--
Apply	30	30	50
Analyze	--	--	50
Evaluate	--	--	--
Create	--	--	
Total (%)	100	100	100

Remember

1. Define software engineering.
2. List different types software myths.

Understand

1. Describe software architecture styles and patterns .
2. Illustrate golden rules for user interface design.

Apply

1. Applying the process of requirement analysis, discuss how the requirements can be collected for a project.
2. Applying debugging strategy fin an error from a code?

Analyze

1. Compare and Contrast software life cycle models.
2. Analyze risk types in the risk management.

Open Book Exam Questions

Assume that 10 errors have been introduced in the requirements model and that each error will be amplified by a factor of 2:1 into design and an addition 20 design errors are introduced and then amplified 1.5:1 into code where an additional 30 errors are introduced. Assume further that all unit testing will find 30 percent of all errors, integration will fi nd 30 percent of the remaining errors, and validation tests will fi nd 50 percent of the remaining errors. No reviews are conducted. How many errors will be released to the field.

23EC007 Design for Testability

3 0 0 3

Course Outcomes

1. Identify various types of faults in digital circuits
2. Interpret the concepts of test generation for digital circuits
3. Implement testable digital logic circuits
4. Interpret system level DFT approaches
5. Explain self test algorithms
6. Outline self checking design

COs – POs Mapping

COs	PO_1	PO_2	PO_3	PSO_1
1	2	-	-	2
2	2	-	-	2
3	3	2	1	3
4	2	-	-	2
5	2	-	-	2
6	3	2	2	3

3–Strongly linked | 2–Moderately linked| 1–Weakly linked

Unit I
Testing and fault modeling
Introduction to testing, Faults in Digital Circuits, Modeling of faults Logical Fault Models, Fault detection and redundancy, Fault equivalence, Fault Location, Fault dominance, Struck at faults, multiple struck at faults, Logic simulation, Types of simulation, Delay models.
Gate level event driven simulation, Ambiguous delay

12 Hours

Unit II
Test pattern generation
Test generation for combinational logic circuits**:** Fault oriented ATG, Fault Independent ATG, Random test generation based on non-uniform distributions. Test generation for sequential circuits**:** TG using iterative array model, Simulation based TG, TG using RTL models, Random test generation for sequential cicuits.
ATG systems, TG methods

12 Hours

Unit III
Design for testability
Testability Concepts, Ad-hoc based design: Test points, monostable-multivibrators, logical redundancy. Generic scan based design: Full serial integrated scan, non-serial scan. Classical scan based design.
Built-In Self-Test: BIST concepts, hardcore, levels of test. Test pattern generation for BIST**:** Exhaustive testing, Pseudo random testing, Pseudo exhaustive testing, Constant weight patterns. BIST Architectures: BEST, RTS, LOCST, Automatic Test Equipment(ATE)",Memory built in self-Test (MBIST) and Logic Built_in _Test(LBIST)
CSTP, BILBO

12 Hours

Unit IV
Fault diagnosis
Logical Level Diagnosis**:** Basic concepts, fault dictionary, Guided probe testing, Diagnosis by UUT reduction, Fault Diagnosis for Combinational Circuits. Self-checking design: Basic concepts, Error detecting and error correcting codes, multiple bit errors, self-checking circuits, Parity check function, Self-checking for equality checkers.
Self-checking for m/n checkers, Berger code

12 Hours
Total: 48 Hours

Textbook (s)

1. M.Abramovici, M.A.Breuer and A.D. Friedman, Digital systems and Testable Design, Jaico Publishing House, 2000.
2. P.K. Lala, Digital Circuit Testing and Testability, Academic Press, 1997.

Reference (s)

1. M.L.Bushnell and V.D.Agrawal, Essentials of Electronic Testing for Digital, Memory and Mixed-Signal VLSI Circuits, Kluwer Academic Publishers, 2000.
2. A.L.Crouch, Design Test for Digital IC's and Embedded Core Systems, Prentice Hall International, 2002.

SAMPLE QUESTION (S)

Internal Assessment Pattern

Cognitive Level	Int. Test 1 (%)	Int. Test 2 (%)	Open Book Examination (%)
Remember	20	20	--
Understand	50	40	--
Apply	30	40	70
Analyse	--	--	30
Evaluate	--	--	--
Create	--	--	--
Total (%)	100	100	100

Remember

1. List out the different types of simulation.
2. List out the different types self test and test algorithms
3. Define gate level event driven simulation
4. Define testability
5. List out the different fault models

Understand

1. Interpret the various operations of a test algorithm.
2. Explain principle involved in the fault modeling
3. Illustrate the working principle of fault detection
4. Compare controllability and observability
5. List out the different fault models
6. Explain system level DFT approaches

Apply

1. Carryout DFT approaches and with the help of neat sketch write the working of each level.
2. Demonstrate the application of MBIST circuits
3. Find delay models and with a neat sketch write the working of each model.
4. Demonstrate the application of generic scan based design
5. List out the different fault models
6. Derive a functional testing model.
7. Generate embedded core testing model.
8. Consider the circuit of figure 1. Let f be the fault b SA0 and g be a SA1.
9. Does f mask g under the test 0110? Does f mask g under the test 0111?

Are the faults f and {f,g} distinguishable?

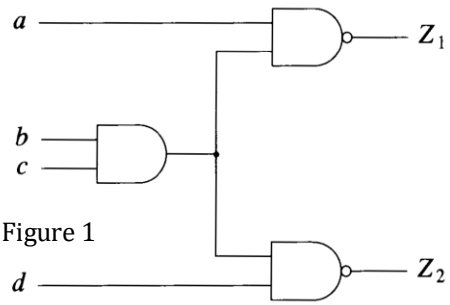

Figure 1

Analyse

. 1. Compare and Contrast between classical scan based design and generic scan based design.
2. Is increasing the efficiency of test pattern generation for BIST? If yes, Justify
3. Compare and Contrast between specific and generic offline BIST architectures.
4. Demonstrate the application of generic scan based design
5. Defend Simultaneous Self Test (SST)?

6. Use only implications to show that the fault f s-a-0 in the circuit of figure 2 is undetectable.

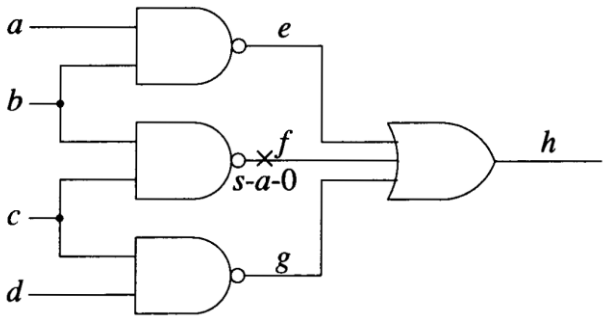

Figure 2

23EC008 Biomedical Signal Processing

3 0 0 3

Course Outcomes

1. Illustrate the waveform characteristics of biomedical signals
2. Explain the properties of biomedical signals
3. Assess algorithms for cardiological signal processing
4. Demonstrate suitable algorithms for neurological signal processing
5. Outline the diagnosis of biomedical signals
6. Explain the different adaptive algorithms for noise and interference cancellations

COs–POsMapping

COs	PO1	PO2	PO3	PSO2
1	2	-		2
2	2	-		2
3	3	2	2	3
4	3	2	2	3
5	3	2	2	3
6	2	-		2

3–Stronglylinked|2–Moderatelylinked|1–Weakly linked

Unit I

Introduction to Biomedical Signals

Introduction to biomedical signals The nature of biomedical signals, action potential, objectives of biomedical signal analysis, Difficulties in biomedical signal analysis, computer aided diagnosis, Basic electrocardiography, the brain and its potentials, the electrophysiological origin of brain waves, EEG signals and its characteristics, EEG analysis. Basic EMG.

Electroneurogram, Phono cardiogram

12 Hours

Unit II

Cardiological Signal Processing

Basic ECG, Electrical Activity of the heart, ECG data acquisition, ECG lead system, ECG parameters & their estimation, Use of multiscale analysis for ECG parameters estimation, Noise & Artifacts, arrhythmia analysis monitoring, long-term continuous ECG recording, direct ECG data compression techniques.

Cardiotocography, Methods of Monitoring Fetal Heart Rate.

12 Hours

Unit III

Neurological Signal Processing

Basic EEG, Linear prediction theory, the autoregressive method, spectral error measure, adaptive segmentation, Sleep EEG: data acquisition and classification of sleep stages, the markov model and markov chains, template matching for EEG-spike-and-wave detection.

Dynamics of sleep-wake transitions, Hypnogram model parameters

12Hours

Unit IV

Adaptive Interference/Noise Cancellation

The wiener filtering problem, principle of an adaptive filter, the Widrow Hoff least mean square adaptive algorithm, Adaptive noise canceller: cancellation of 50/60hz interference in ECG, cancelling donor heart interference in heart-transplant ECG, cancellation of high frequency noise in electro-surgery.

X-Ray imaging, Magnetic Resonance Imaging, CT scan **12 Hours**

Total:48 Hours

Text Book (s) :

1. D.C.Reddy, Biomedical Signal Processing: Principles and Technique's Tata McGraw Hill, 2005.
2. E.N. Bruce, Biomedical Signal Processing and Signal Modelling, John Wiley and Sons, 2007.

3. MetinAkay, Biomedical Signal Processing, Academic Press, 2012.

References:

1. Sörnmo,Bioelectrical Signal Processing in Cardiac & Neurological Applications, Academic Press,2005.
2. Rangayyan,Biomedical Signal Analysis,Wiley 2002.
3. I Enderle, Introduction to Biomedical Engineering, Elsevier, 2nd Edition, 2005

SAMPLEQUESTION(S)

InternalAssessmentPattern

CognitiveLevel	Int.Test1 (%)	Int.Test2 (%)	Open Book Examination (%)
Remember	35	30	--
Understand	35	35	--
Apply	30	35	60
Analyze	-		40
Evaluate	--	--	--
Create	--	--	--
Total(%)	100	100	100

Remember

1. Define Systole and diastole
2. Define BioElectrode
3. List out the requirements for Bio amplifier
4. List out the biomedical signals

Understand

1. Explain about cardio vascular system
2. Explain how the Imaging Techniques is helpful in biomedical signal processing
3. Illustrate the classification of EEG rhythms based on the frequency bands
4. Compare the biomedical signal of ECG, EEG, and EMG
5. Explain the application of MRI with neat diagram

Apply

1. Implement an algorithm to detect QRS complexes in an ongoing ECG signal
2. Show that a signal averaging improves the signal to noise ratio by a factor of square root of M
3. Design an adaptive filter using LMS algorithm
4. Construct an optimal filter to remove noise from a signal, given that the signal and noise processes are independent, stationary, random processes**[Open Book Examination Questions]**
5. Demonstrate a typical ECG waveform over one cardiac cycle indicating the important component waves, and the typical intervals between them. Label each wave or interval with the corresponding cardiac event or activity. **[Open Book Examination Questions]**

Analyze

1. Organize the spectral estimation in biomedical signals**[Open Book Examination Questions]**
2. Compare normal segmentation and adaptive segmentation**[Open Book Examination Questions]**

23EC009 Digital Image Processing

3 0 0 3

Course Outcomes

1. Interpret fundamental concepts of digital image processing
2. Demonstrate image transforms
3. Assess image enhancement and color image processing
4. Illustrate image restoration techniques
5. Summarize line, point, edge, threshold and region based segmentation for digital images
6. Outline various compression models and compression techniques for digital images

COs – POs Mapping

COs	PO_1	PO_2	PO_3	PSO_2
1	2	-	-	2
2	3	2	2	3
3	3	2	2	3
4	2	-	-	2
5	2	2	-	3
6	3	2	2	3

3–Strongly linked | 2–Moderately linked| 1–Weakly linked

Unit I

Digital Image Fundamentals

Fundamental steps in Digital Image Processing, Elements of visual perception, Image sampling and quantization, basic relationships between pixels.

Image transforms: 2D DFT and its properties, Discrete cosine transform, Discrete Wavelet Transform.

Haar Transform, Hadamard Transform

12 Hours

Unit II

Image Enhancement and Color Image Processing

Enhancement in spatial domain: Intensity transformations, Histogram Processing, smoothing and sharpening, ImageEnhancement in Frequency Domain: Smoothing and Sharpening Filters

Color Image Processing: Color fundamentals, Color models, Pseudo color Image Processing, Full Color Image Processing, color Image Transformations.

Color Image Enhancement in spatial and frequency domain.

12 Hours

Unit III

Image Restoration

Image Degradation/Restoration model, Noise models, Restoration using spatial filtering, Periodic noise reduction byfrequency domain filtering, Linear Position-Invariant Degradations, Inverse filtering, Minimum Mean Square Error Filtering, Constrained Least squares filtering.

Estimating the degradation function, Geometric Mean filter

12 Hours

Unit IV

Image Segmentation and Compression

Image segmentation: Fundamentals, point, Line and Edge detection, Thresholding, Region based Segmentation.

Image Compression: Fundamentals, Image Compression Models, Lossless Compression, Lossy Compression,Transform coding and JPEG compression standard.

Watershed algorithm, Compression Formats

12 Hours

Total: 48 Hours

Textbook (s)

1. Rafel C.Gonzalez and Richard E.Woods, Digital Image Processing, Pearson Education, 3rdEdition 2011
2. S.Sridhar, Digital Image Processing, Oxford publishers, 2nd Edition, 2016

Reference (s)

1. Anil K. Jain, Fundamentals of Digital Image Processing, Pearson Education, 1st Edition, 2015
2. S.Jayaraman, S.Esakirajan, T.Veerakaumar, Digital Image Processing, McGraw Hill publishers, 2011
3. M.Sonka,V. Hlavac, R. Boyle, Image Processing, Analysis and Machine Vision, Vikas Publishing House,2001

23EC010 Neural Networks and Deep Learning

3 0 0 3

Course Outcomes

1. Illustrate the basic principles of neural networks fundamentals
2. Asses artificial neural networks and their learning strategy
3. Demonstrate the principles of single layer and multilayer feed forward neural networks and back Propagation algorithm
4. Classify various learning techniques
5. Demonstrate the architectures of CNN and RNN
6. Differentiate between machine learning, deep learning and artificial intelligence

COs – POs Mapping

COs	PO_1	PO_2	PSO_1	PSO_2
1	2	-	2	2
2	2	-	2	2
3	2	-	2	2
4	3	2	3	3
5	3	2	3	3
6	3	3	3	3

3– Strongly 2– Moderately 1– Weakly

Unit I

Introduction to Neural Networks

Introduction, structure and working of Biological Neural Network , Artificial Neuron Models ,Trends in Computing Comparison of BNN and ANN Characteristics of ANN, McCulloch -Pitts Model, Artificial Neuron Model, Operations of Artificial Neuron, Types of Neuron Activation Function, Classification Taxonomy of ANN-Connectivity, Neural Dynamics: Activation and Synaptic, Learning Strategy: Supervised, Unsupervised, Reinforcement, Learning Process: Error Correction Learning, Memory Based Learning, Hebbian Learning, Competitive, Boltzmann Learning.

Applications of Memory Based Learning **12 Hours**

Unit II

Single & Multilayer Feed Forward Neural networks

Perception Models: Discrete, Continuous and Multi -Category, Training Algorithms: Discrete and Continuous Perception Networks, Perception Convergence theorem, Limitations of the Perception Model, Credit Assignment Problem, Generalized Delta Rule, Gradient Descent, Back propagation neural network, Back Propagation Algorithm XOR Problem, Heuristics, Output Representation and Decision Rule, Feature Detection

Applications of BPNN **12 Hours**

Unit III

Leaning Algorithms

Supervised learning :Linear Regression, Logistic Regression, K Nearest Neighbour (KNN), Random Forest, Support Vector Machines (SVM), Un supervised learning: k-means, c-means, Apriori, Reinforcement learning: Q-Learning, Case Study

Risk Evaluation, Anomaly Detection **13 Hours**

Unit IV

Convolutional Neural Networks and Recurrent Neural Networks

Introduction to CNNs, Convolution, Correlation, Filtering, Kernel filter, Principles behind CNNs, Multiple Filters, CNN architectures, Detection and Segmentation, Visualizing and Understanding, Advanced CNNs for computer vision, Introduction to RNNs, Unfolded RNNs

RNN applications, CNN applications **11 Hours**

Total: 48 Hours

Textbook (s)

1. James A Freeman and Davis Skapura, Neural Networks, Pearson Education, 2002.
2. Simon Haykin, Neural Networks-Acomprehensive foundation, Pearson Education, 2001
3. Bengio, Yoshua, Ian J. Goodfellow, and Aaron Courville. "Deep learning." An MIT Press

book in preparation. (2015).

Reference (s)

1. S. N. Sivanandam, S. Sumathi, S. N. Deepa, Neural Networks using MATLAB 6.0, TMH, 2006
2. B Yegnanarayana, Artificial neural networks, Prentice Hall of India, 1stEdition, 2005.

SAMPLE QUESTION (S)

Internal Assessment Pattern

Cognitive Level	Int. Test 1 (%)	Int. Test 2 (%)	Open Book Examination (%)
Remember			--
Understand	40	30	--
Apply	60	50	50
Analyze	--	20	50
Evaluate	--	--	--
Create	--	--	--
Total (%)	100	100	100

Remember

1. Define NN
2. Define Axon
3. Define activation functions.
4. Define Chromosome
5. List two methods in which the information flows in a nervous system
6. List five unsupervised learning algorithms

Understand

1. Explain about the McCulloch-Pitts Model.
2. Explain about ANN
3. Explain about Learning Strategy
4. Explain the role of activation function in exhibiting the output from a neuron
5. Construct the 5 node pattern {0,1,1,0,1} by Hopfield network and explain the procedure for recalling andstoring
6. Explain Adaptive Resonance Theory and its type
7. Explain CPN and illustrate the steps involved in training algorithm of full CPN

Apply

1. Construct a ANN circuit which makes the flow of data using multilayered and multilevel networks
2. Apply clusters of various datasets maintained by learning approach considering live example
3. Draw the neat architecture of hamming network and trace the inhibitory and excitatory neurons byconsidering an inconsistent vector

Analyse

1. Differentiate between learning and training algorithms considering multilayer perceptron network and tracethe different types of networks obtained.
2. Differentiate between Counter Propagation Network and Adaptive Resonance Theory
3. Determine the energy function of continuous Hopfield network.
4. Determine a neural network that illustrates and learns how to balance an inverted pendulum.

Open Book Exam

1. Generate a neural net using BPNN algorithm for XOR logic functions. The architecture and the valuesof initial weights and biases are shown below.

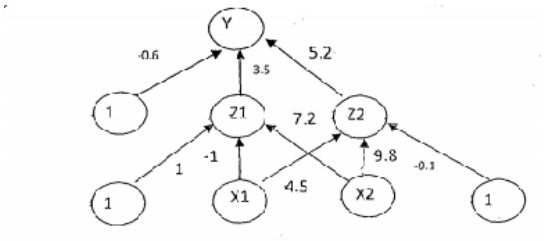

2. Evaluate using Back Propagation algorithm for the below map considering weights , inputs and outputs

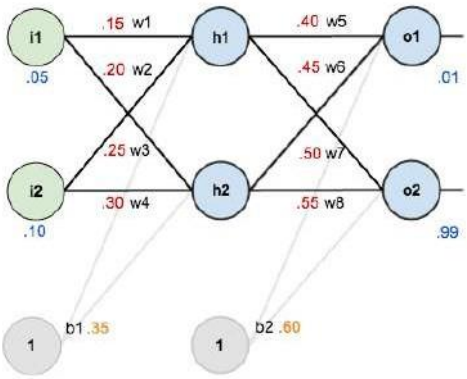

23PWX01Project Work

0 0 16 8

Course Outcomes

1. Identify a contemporary engineering application to serve the society at large
2. Use engineering concepts and computational tools to get the desired solution
3. Justify the assembled/fabricated/developed products intended
4. Organize documents and present the project report articulating the applications of the concepts and ideas coherently
5. Demonstrate ethical and professional attributes during the project implementation
6. Execute the project in a collaborative environment

COs – POs Mapping

COs	PO1	PO2	PO3	PO4	PO 5	PO 6	PO 7	PO 8	PO 9	PO 10	PO 11	PO 12	PSO 1	PSO 2
1	3	2				3	2						3	3
2	3	3			3								3	3
3	3	3	3	2							3		3	3
4										3		3	3	3
5								3					3	3
6									3				3	3

3–Strongly linked | 2–Moderately linked | 1–Weakly linked

23SIX02 Summer Internship II

0 0 0 1

Course Outcomes

1. Demonstrate communication skills to meet the requirement of industry
2. Develop logical thinking and analytical skills to thrive in competitive examinations
3. Use mathematical concepts to solve technical quizzes
4. Develop technical skills to work out real time problems
5. Develop algorithms for different applications
6. Solve industry defined problems using appropriate programming skills

COs – POs Mapping

COs	PO_1	PO_2	PO_5	PO_6	PO_{10}	PO_{12}
1					3	
2	3	1				
3	3					
4	3	1	3			3
5	3	1	3	3		3
6	3	1	3			3

3–Strongly linked | 2–Moderately linked| 1–Weakly linked

23EC012 Real-Time Systems Design and Analysis

0 0 0 3

Course Outcomes

1. Summarize a real time system
2. Exemplify hardware considerations of real time system
3. Assess the software design activities
4. Explain various engineering metrics considerations
5. Compare the performance analysis of various parameters during system design
6. Organize different performance optimization techniques

COs – POs Mapping

COs	PO1	PO2	PO3	PSO1
1	2			2
2	2			2
3	3	2	2	3
4	2			2
5	3	2	2	3
6	3	2	2	3

3–Strongly linked | 2–Moderately linked| 1–Weakly linked

Unit I

Real Time Concepts and Hardware Considerations

Terminology, Real-Time System Design Issues, Example Real-Time Systems, Basic Architecture, Hardware Interfacing, Central Processing Unit, Memory, Input/Output, Enhancing Performance, Other Special Devices.

Brief History of real time systems, Flynn's Taxonomy for Parallelism

12 Hours

Unit II

Software System Design

Software Requirements Engineering - Requirements-Engineering process, Types of Requirements, Requirements Specification for Real-Time Systems, Formal Methods in Software Specification, Structured Analysis and Design, Software System Design - Properties of Software, Basic Software Engineering Principles, The Design Activity, Procedural-Oriented Design, Object-Oriented Design

Case Study in Software Requirements Specification for Four-Way Traffic Intersection Traffic Light Controller

12 Hours

Unit III

Performance Analysis and Optimization

Theoretical Preliminaries, Performance Analysis, Application of Queuing Theory, I/O Performance, Performance Optimization, Results from Compiler Optimization, Analysis of Memory Requirements, Reducing Memory Utilization.

Results from Compiler Optimization - Loop Unrolling and Loop Jamming

12 Hours

Unit IV

Engineering Considerations

Metrics, Faults, Failures, and Bugs, Fault-Tolerance, Systems Integration, Refactoring Real-Time Code, Cost Estimation Using COCOMO

Fault-Tolerance - The Kalman Filter, Refactoring Real-Time Code - Telltale Comments

12 Hours

Total: 48 Hours

Textbook (s)

1. Phillip A. Laplante, Real-time Systems Design and Analysis, 3rd edition, A JOHN WILEY & SONS, INC., PUBLICATION, 2004

Reference (s)

1. Jane W. S. Liu, Real-Time Systems, Pearson Education, 2000.

SAMPLE QUESTION (S)
Internal Assessment Pattern

Cognitive Level	Int. Test 1 (%)	Int. Test 2 (%)	Open Book Examination (%)
Remember			--
Understand	70	40	--
Apply	30	50	50
Analyze	--	10	50
Evaluate	--	--	--
Create	--	--	--
Total (%)	100	100	100

Remember

1. Define real-time system.
2. List few examples of real-time systems.
3. What is meant by fail safe state?

Understand

1. Explain the fetch and execute cycles.
2. Illustrate the programmable logic array device.
3. Illustrate the programmable array logic device.

Apply

1. Demonstrate the use of finite state machine in system design.
2. Demonstrate the Response-Time Modeling.
3. Assess the Short-Circuiting Boolean Code. **[Open Book Examination]**

Analyze

1. Differentiate between state charts and perti nets.
2. Organize the analysis of Polled Loops.
3. Outline the Response-Time Analysis for Fixed-Period Systems. **[Open Book Examination]**

23EC013 UHF and EHF communication systems

0 0 0 3

Course Outcomes

1. Interpret the various subsystems and their parameters
2. Asses various multiple access techniques and spread spectrum techniques
3. Demonstrate the concepts of Link Design
4. Explain RADAR parameters and applications
5. Demonstrate the operation of CW and MTI RADARs
6. Differentiate the tracking techniques for RADARs

COs – POs Mapping

COs	PO1	PO 2	PO3	PO4	PSO2
1	2	-			2
2	3	2	2		3
3	3	2	2		3
4	2	-		2	2
5	3	2		2	3
6	3	2	2	2	3

3–Strongly linked | 2–Moderately linked| 1–Weakly linked

Unit I

Introduction to Satellite and Subsystems

Introduction to spectrum characteristics and Spectrum ranges, basic Concepts of Satellite Communications, Applications, Orbital Mechanics, Orbit determination, Look Angle determination, Orbital perturbations, launches and launch vehicles, Orbital effects in communication systems performance. Attitude and orbit control system, telemetry, tracking, Command and monitoring, power systems, communication subsystems, Satellite antennas.

Orbit Determination, Manned Space Vehicles

12 Hours

Unit II

Satellite Link Design and Multiple Access Techniques

Satellite link Design: Basic transmission theory, system noise temperature and G/T ratio.

Multiple Access Techniques: Frequency Division Multiple Access (FDMA), Time Division Multiple Access (TDMA), Demand Assignment Multiple Access (DAMA) , Code Division Multiple Access (CDMA), Spread spectrum techniques

Design of UP & Down links, Packet radio systems and Protocols

12 Hours

Unit III

Basics of Radar

Introduction, Maximum Unambiguous Range, Radar Block Diagram and Operation, Simple form of Radar Equation, Radar Cross Section of simple Targets, PRF and Range Ambiguities. CW and Frequency Modulated Radar: Doppler Effect, CW Radar-Block Diagram, MTI and Pulse Doppler Radar**:** Introduction, Principle, Delay Line Cancellers, Filter Characteristics, Blind Speeds, Double Cancellation, Staggered PRFs, Range Gated Doppler Filters, MTI versus Pulse Doppler Radar.

Multiple Frequency CW Radar, MTI Radar with Power Oscillator Transmitter **13 Hours**

Unit IV

Tracking Radar

Tracking with Radar, Sequential Lobing, Conical Scan, Amplitude Comparison monopulse radar using one coordinate system and Phase Comparison methods, Target Reflection Characteristics and Angular Accuracy, Tracking in Range, Acquisition and Scanning Patterns, Comparison of Trackers, Radomes, Frequency scan Arrays, Radar Display types, Branch type and Balanced type duplexers

Amplitude Comparison using two coordinate system, Circulators as Duplexers

11 Hours

Total: 48 Hours

Textbook (s)

1. Timothy Pratt, Charles Bostian and Jeremy Allnutt, WSE, Satellite Communications, Wiley Publications, 2nd Edition, 2004
2. Wilbur L. Pritchard, Robert A Nelson and Henri G.Suyderhoud, Satellite Communications Engineering, 2nd Edition, Pearson Publications, 2012
3. Merrill I. Skolnik Introduction to Radar Systems, Tata McGraw-Hill, Third Edition, 2001

Reference (s)

1. K.N. Raja Rao, Fundamentals of Satellite Communications, PHI, 2004
2. Dennis Roddy , Satellite Communications, McGraw Hill, 2nd Edition, 1996
3. Gottapu Sasibhushana rao, Microwave & Radar Engineering, Pearson Education, 2013

SAMPLE QUESTION (S)

Internal Assessment Pattern

Cognitive Level	Int. Test 1 (%)	Int. Test 2 (%)	Open Book Examination (%)
Remember		20	--
Understand	40	40	--
Apply	60	40	50
Analyze	--		50
Evaluate	--	--	--
Create	--	--	--
Total (%)	100	100	100

Remember

1. List out some communication satellites with their RF bandwidths
2. List out any two advantages and disadvantages of satellite communication over other types ofcommunication methods
3. Define sub satellite point
4. Recall the salient features of transmit-receive (T/R) Earth station
5. Recall the merits and demerits of satellite communication
6. Define blind speed
7. Define a false alarm
8. State the purpose of duplexer

Understand

1. Illustrate the main functions of INSAT series of satellites
2. Explain the various orbital perturbations and possible remedial measures to overcome them
3. Explain the launching process of a geo stationary satellite with aid of diagram.
4. Compare spin stabilization and momentum stabilization
5. Explain the significance of space link equation
6. Explain the need for integration of radar pulses and how does this factor affect the radar range equation
7. Illustrate the importance of a CW radar with non-zero IF receiver with block diagram

Apply

1. Find the i)path eccentricity ii) orbital time period for a satellite whose apogee height is 4000 km andperigee height is 1000 km. Assume radius of earth 6370km
2. Assess that three communication GEO satellites are sufficient to provide coverage for the globe
3. Find the gain in dB for a 3m paraboloidal antenna operating at frequency of 12 GHz. Assume apertureefficiency of 0.55
4. A satellite at 12GHz operates with transmit power of 6W and antenna gain of 48.2 dBW. Find [EIRP]in dBW
5. Antenna has noise temperature of 35Kelvin and is matched to a receiver that has noise temperature of100Kelvin. Find i) Noise power density. ii) Noise power for 36 MHz bandwidth
6. Compute the expression for the impulse response characteristics of a matched filter receiver

that maximizesthe peak-signal-to-noise-power ratio

7. Demonstrate range and Doppler measurements of the target using triangular FMCW radar with neatdiagrams.

Analyse

1. Compare and Contrast between geo stationary and non-geostationary orbits
2. Analyze atmospheric drag and earth's shape that cause orbital disturbances
3. Differentiate elevation and azimuth angles
4. Organize the link power budget equation and analyze the terms
5. Compare active and passive attitude control of satellites
6. Outline the range and Doppler measurements using FM-CW radar if the target is approaching the radar andexplain it for triangular frequency modulation with neat diagram
7. Differentiate MTI and pulse Doppler radar

OPEN Book

1. It is necessary to maintain False-Alarm-Rate as constant. Justify the statement
2. Differentiate tracking radar and search radar
3. Outline the tracking procedure using amplitude-comparison monopulse radar (one angular coordinate) andhow it is different from that of either sequential lobing or conical scan technique

23EC014 Computer Architecture

0 0 0 3

Course Outcomes

1. Summarize microarchitectures
2. Exemplify modelling of memory technologies
3. Assess base and bound registers
4. Compare various multithreading Approaches
5. Organize different multiprocessors
6. Explain network routing

COs – POs Mapping

COs	PO1	PO2	PO3	PSO1
1	2			2
2	2			2
3	3	2	2	3
4	3	2	2	3
5	3	2	2	3
6	2			2

3–Strongly linked | 2–Moderately linked| 1–Weakly linked

Unit I
Introduction
Introduction, Architecture, and Microarchitecture, Machine Models, ISA Characteristics, Pipelining Review, Micro-coded Microarchitecture, Pipeline Basics, Structural Hazard, Data Hazards, Memory Technologies, Classification of Caches, Cache Performance
Dependable Memory Hierarchy , Virtual Memory **12 Hours**

Unit II
Memory management and Protection
Memory Management Introduction, Base and Bound Registers, Page Based Memory Systems, Translation, and Protection, TLB Processing, Cache and Memory Protection Interaction
Instructions for Making Decisions , Supporting Procedures in Computer Hardware **12 Hours**

Unit III
Vector Processors and GPUs
Vector Processor Introduction, Vector Parallelism, Vector Hardware Optimizations, Vector Software, and Compiler Optimizations, Reduction, Scatter/Gather, and the Cray, SIMD, GPUs, Multithreading Motivation, Coarse-Grain Multithreading, Simultaneous Multithreading
Hardware Multithreading, Multicore and Other Shared Memory Multiprocessors **12 Hours**

Unit IV
Multiprocessors
Locking Review, Bus Implementation, Cache Coherence, Bus-Based Multiprocessors, Introduction to Interconnection Networks, Message Passing, Interconnect Design, Networking Review, Topology, Topology Parameters, Network Performance, Routing, and Flow Control
SISD, MIMD, SIMD, SPMD, and Vector

12 Hours
Total: 48 Hours

Textbook (s)

1. David A. Patterson, John L. Hennessy, Computer Organization and Design: The Hardware/Software Interface, 3rd edition, The Morgan Kaufmann Series, 2011

2. David A. Patterson, John L. Hennessy, Computer Organization and Design MIPS Edition: The Hardware/Software Interface, 5th edition, The Morgan Kaufmann Series, 2013

Reference (s)

1. Linda Null; Julia Lobur, Essentials of Computer Organization and Architecture Fifth Edition, Jones & Bartlett Learning, 2nd Edition, 2019

Sample Question (S)
Internal Assessment Pattern

Cognitive Level	Int. Test 1 (%)	Int. Test 2 (%)	Open Book Examination (%)
Remember	10	10	--
Understand	45	45	--
Apply	45	45	50
Analyze	--	--	50
Evaluate	--	--	--
Create	--	--	--
Total (%)	100	100	100

Remember

1. Define pipelining.
2. List few applications of microarchitectures.
3. What is meant by structural hazard?
4. Name any two important memory technologies.

Understand

1. Explain the basic model of page based memory systems.
2. Explain about vector hardware optimization.
3. Explain the key differences between Coarse-Grain Multithreading and Simultaneous Multithreading.

Apply

1. Describe the general characteristics of a program that would exhibit very little temporal and spatial locality with regard to data accesses. Provide an example program
2. If the time for an ALU operation can be shortened by 25%
   a. Will it affect the speedup obtained from pipelining? If yes, by how much? Otherwise, why?
   b. What if the ALU operation now takes 25% more time? **[Open Book Examination]**

Analyze

1. SRAM is commonly used to implement small, fast, on-chip caches while DRAM is used for larger, slower main memory. In the past, a common design for supercomputers was to build machines with no caches and main memories made entirely out of SRAM. If cost were no object, would you still want to design a system this way?
2. A computer architect needs to design the pipeline of a new microprocessor. She has an example workload program core with 106 instructions. Each instruction takes 100 ps to finish.
   a. How long does it take to execute this program core on a nonpipelined processor?
   b. The current state-of-the-art microprocessor has about 20 pipeline stages. Assume it is perfectly pipelined. How much speedup will it achieve compared to the nonpipelined processor?
   c. Real pipelining isn't perfect, since implementing pipelining introduces some overhead per pipeline stage. Will this overhead affect instruction latency, instruction throughput, or both?
   [Open Book Examination]

23FIX01 Full Semester Internship

0 0 0 8

Course Outcomes

1. Use the knowledge of mathematics, science, engineering fundamentals, and an engineering specialization to the solution of complex engineering problems
2. Identify, formulate, review research literature, and analyze complex engineering problems reaching substantiated conclusions using first principles of mathematics, natural sciences, and engineering sciences
3. Select appropriate techniques, resources, and modern engineering and IT tools including prediction and modeling to complex engineering activities with an understanding of the limitations
4. Use ethical principles and commit to professional ethics and responsibilities and norms of the engineering practice
5. Function effectively as an individual, and as a member or leader in diverse teams, and in multidisciplinary settings
6. Communicate effectively on complex engineering activities with the engineering community and with society at large, such as, being able to comprehend and write effective reports and design documentation, make effective presentations, and give and receive clear instructions

COs – POs Mapping

COs	PO_1	PO_2	PO_5	PO_8	PO_9	PO_{10}	PSO_1	PSO_2
1	3	-	-	-	-	-	3	3
2	-	3	-	-	-	-	3	3
3	-	-	3	-	-	-	3	3
4	-	-	-	3	-	-	-	-
5	-	-	-	-	3	-	-	-
6	-	-	-	-	-	3	-	-

3–Strongly linked | 2–Moderately linked| 1–Weakly linked